California High-Speed Train Project

TECHNICAL MEMORANDUM

Terminal and Heavy Maintenance Facility Guidelines
TM 5.1

Prepared by: *Signed document on file* _25 AUG 2009_
James Campbell and Yu Hanakura Date

Checked by: *Signed document on file* _25 AUG 2009_
Paul Mosier, O & M Manager Date

Approved by: *Signed document on file* _25 AUG 2009_
Ken Jong, Engineering Manager Date

Released by: *Signed document on file* _25 AUG 2009_
Tony Daniels, Program Director Date

Revision	Date	Description
0	25 AUG 2009	Initial Release

Note: Signatures apply for the latest technical memorandum revision as noted above.

Prepared by PB

for the California High-Speed Rail Authority

This document has been prepared by *Parsons Brinckerhoff* for the California High-Speed Rail Authority and for application to the California High-Speed Train Project. Any use of this document for purposes other than this Project, or the specific portion of the Project stated in the document, shall be at the sole risk of the user, and without liability to PB for any losses or injuries arising for such use.

CONTENTS

1.0 OVERVIEW 1

2.0 PURPOSE AND OBJECTIVE 1

3.0 MAINTENANCE PROTOCOLS ON EXISTING HST SYSTEMS 2

3.1 FRENCH NATIONAL RAILWAY (SNCF) 2

3.1.1 Maintenance Inspection Overview 4

3.1.2 Heavy Maintenance Policy 8

3.1.3 Maintenance and Layup/Storage Facilities 8

3.1.4 Heavy Maintenance Facility Configuration and Capacity 12

3.2 JAPAN RAIL GROUP (JR) 15

3.2.1 Maintenance Inspection Overview 16

3.2.2 Heavy Maintenance Policy 18

3.2.3 Maintenance and Layup/Storage Facilities 19

3.2.4 Heavy Maintenance Facility Configuration and Capacity 23

4.0 PROGRAMMATIC PHASE ENGINEERING CRITERIA 27

4.1 TERMINAL FACILITIES 28

4.2 HEAVY MAINTENANCE FACILITY 28

5.0 GUIDELINES FOR FACILITY DESIGN AND LOCATION 31

5.1 FACILITY TYPES AND FUNCTIONS 32

5.2 FACILITY FOOTPRINT AND SITE REQUIREMENTS 34

5.2.1 Facility Specification Guidelines 35

5.2.2 Heavy Maintenance Facility Specification Guidelines 36

5.2.3 Guidelines for Physical Size of Facilities 38

5.2.4 Heavy Maintenance Facility Requirements 39

5.2.5 Guidelines for Facility Locations 44

5.2.6 California High Speed Train Yard and Maintenance Facility Footprint Guidelines 45

5.2.7 Right Of Way Maintenance 46

1.0 OVERVIEW

The capabilities, roles and physical requirements of the high speed rail maintenance facilities are critical for defining their size and location such that they will support the level of service necessary to efficiently maintain and safely operate a high speed train system. Maintenance is an essential component to the overall safety and operation of the high speed train network and it will be important to establish specific guidelines that can direct the Regional Teams in identifying locations that can accommodate spatial needs for the specific inspection and maintenance requirements established for each of the terminal stations and the "primary" heavy maintenance facility.

Developing the necessary criteria and requirements for such facilities has evolved through the programmatic planning process as the service levels and patterns have been refined. Through each refinement, the level of detail and understanding necessary to further advise the Regional Teams in their efforts to design these facilities has improved.

Given our current understanding of international and American maintenance standards and requirements, and the commonalities and distinctions between them, it is necessary to refine the maintenance requirements for the California High Speed Train Project (CHSTP), developed initially in the programmatic phase, to provide the necessary guidance to the Regional Teams as they engage the project level Preliminary Engineering, EIR/EIS process.

2.0 PURPOSE AND OBJECTIVE

Preliminary guidelines for identifying locations and designing the maintenance and layup facilities for the CHSTP have been developed based on practices used on similar HST systems around the world.

Initially, these preliminary guidelines began development, including participation from several of the Regional Managers, at a workshop meeting that was held in San Diego on December 18, 2008. The focus of this workshop was to discuss high speed train systems in operation today, most notably France, Germany, Japan, Spain, Taiwan, and Korea, and to summarize the maintenance protocols and logistics developed to support these systems. The French and Japanese systems have been cited in this report as examples to illustrate certain different operating and maintenance concepts. This workshop further sought to identify those which will likely be required for maintaining the fleet of high speed trains in California. By summarizing these protocols and logistics, a maintenance context was developed that began to describe certain guidelines for determining the size of both the terminal and heavy maintenance facilities, which in turn will help the Regional Teams identify appropriate locations that can accommodate the required maintenance and inspection space requirements.

The objective of this technical memorandum is to summarize the maintenance practices presented at this workshop and describe how these practices have been applied in the development of guidelines for the CHSTP in an effort to further assist the Regional Teams in the site selection and preliminary design of the six maintenance and layup/storage facilities that will be required as part of the California statewide high speed train network, will likely include facilities in San Francisco, Sacramento, the Central Valley, Los Angeles, Anaheim and San Diego.

In presenting these guidelines, this technical memorandum discusses the following:

- Maintenance practices of existing HST systems. This includes the various "levels" prescribed for inspection, repair and cleaning of the high speed train fleet, as well as the existing size and functions of the tracks and support shops included within the heavy maintenance facilities for the French, Korean and Japanese high speed systems.
- Review of criteria developed during the CHSTP programmatic phase to provide a point of comparison with the updated guidelines presented in this memorandum.

- Description of the specific guidelines updated for the CHSTP maintenance facilities to include facility functions and capabilities and the services that are to be associated with each location, including guidelines specific to designing the heavy maintenance facility.

3.0 MAINTENANCE PROTOCOLS ON EXISTING HST SYSTEMS (EXAMPLES)

3.1 FRENCH NATIONAL RAILWAY (SNCF EXAMPLES)

France has approximately 1,148 miles of high speed train (HST) corridors, with three additional lines currently under construction.

The Train à Grande Vitesse (TGV) service opened to the public between “Paris” and “Lyon” on September 27, 1981. The system was initially designed to cater towards business people traveling between those two cities. The TGV was developed to be considerably faster than traditional trains, cars, or airplanes. The system however became popular outside its original target market, with the general public welcoming the fast and practical travel between the two cities. Since then, further services have opened throughout France.

The commercial success of each TGV service went well beyond original expectations. For example the last new service was on the East line, from “Paris” to “Strasbourg”. It was opened to the public in the summer of 2007 and in its first month of operation, more than 1,000,000 passengers traveled on the line.

In addition, the success of the TGV in France has inspired several additional HST lines, based on TGV technology, in Belgium, the Netherlands and the United Kingdom. In essence, the French HST service evolved to become a “European” HST service.

TGV train sets are lightweight and assembled in a push-pull configuration with a high power rating that can be coupled together in pairs. As a result, they can:

- Attain high mean revenue speeds in the region of 240 km/h. Revenue speeds such as this generate substantial cuts in journey time, providing travel times that are competitive with the airlines for distances of up to 1,000 km.
- Run on a frequent basis despite the limited number of available train sets through rapid turnaround (push-pull design and ease of changing direction in stations).
- Make full use during peak periods of the capacity available on the main line through the formation of one longer train set, assembled by coupling together two shorter ones together.

Table 3.1.1 - Currently Used TGV Train Sets

Series	Routes	# Trailers	Length (Meter)	Seats	Speed (km/h)	Note
TGV SE renov. 1	Southeast (LYRIA)	10	200.2	240+*111*	270	
TGV SE renov. 2	North	10	200.2	276+*69*	300	
TGV Freight	Southeast	10	200.2	0	270	Postal service freight only
TGV A	Atlantic Southeast	12	237.6	344+*104*	300	
TGV R	East (Domestic) North South Mediterranean (ARTESIA)	10	200.2	237-256 +*110-119*	320	

Series	Routes	# Trailers	Length (Meter)	Seats	Speed (km/h)	Note
TGV R 2N	Southeast South Mediterranean	10	200.2	328+*182*	320	
TGV POS	East (ALLEO) Southeast (LYRIA)	10	200.2	250+*111*	320	
TGV MGV "IRIS 320"	All Lines	10	200.2	0	320	High-speed infrastructure inspection
TGV Duplex	Atlantic Southeast South Mediterranean	10	200.2	328+*182*	320	Bi-level
TGV R PBA	North (THALYS)	10	200.2	256+*119*	300	
TGV R PBKA	North (THALYS)	10	200.2	256+*119*	300	
TGV TM (Eurostar)	North (Eurostar) Southeast	20	393.7	560+*208*	300	

To ensure the preventive and corrective maintenance of the equipment, the maintenance personnel must adhere to specific "rules" that are as clear and concise as possible. These "rules" are established by the operating company (SNCF) and manufacturing companies, who rely extensively on the experience of the maintenance personnel, and are set forth in maintenance documents. The personnel responsible for developing these documents must:

- Be totally familiar with the technology of the equipment
- Have long-standing experience in maintenance and the specialty in which they work

These technical specialists are located in every maintenance "depot" and heavy maintenance facility. They organize and conduct the studies and investigations necessary to determine or adapt the maintenance rules.

The technical specialists in the maintenance "depots" are responsible for preparing and updating the "preventive maintenance" documents that prescribe the content and frequency of work performed during examinations and inspections. They are also responsible for compiling the documents required to perform the work associated with corrective maintenance.

The technical specialists assigned to the heavy maintenance facilities are responsible for preparing and updating the "repair" documents for all the equipment or components that are assigned to it.

The Rolling Stock maintenance and repair documents define the following in a manner that can be used directly by the maintenance personnel:

- The frequency and level of the maintenance operations
- The content of the work
- Detailed information on certain procedures

3.1.1 Maintenance Inspection Overview

The operating life of the equipment used on the TGV is 30 to 40 years, according to service feedback. The TGV life cycle begins with an "Initial Start-up" (car assembly, testing, and acceptance) that allows controlled testing of the general state of the train set delivered by the manufacturer. This operation is not considered a maintenance operation, but as the beginning of the train set life.

After about 15 to 20 years in service (this value is to be determined by the operating network in relation with the train set general state and the passenger quality and comfort objectives) a "Half Life Operation" (mid-life overhaul) is programmed.

The TGV end of life process is an operation called "Final Life Operation" (rail vehicle retirement), in which the equipment is decommissioned. This disposition is decided by the operating network based on economic parameters and the general state of the equipment.

TGV's periodic maintenance of its train sets and the requisite resources are planned and applied to reconcile the essential factors of high speed travel and the design of the articulated train set with the following objectives:

- Safety
- Cost effective maintenance
- Performance and reliability of equipment
- Availability of the rolling stock through minimization of failures
- Comfort and cleanliness through quality control

With regard to managing the overall cost of the rail transport service, it is essential to control the costs associated with maintenance, maximizing the utilization of the fleet while minimizing the equipment that is held out of service. Moreover, the equipment is engineered such that work can be organized to reduce the frequency and duration of periods where the equipment is held out of service. This sustains practical limits on investments in new train set equipment.

The assurance protocols developed by HST Maintenance to achieve these goals are based notably on the implementation of preventive maintenance actions, and include:

- Specialization of maintenance sites according to the type(s) of activities and equipment ; specialization of personnel skill sets.
- Continuous training of personnel.
- Consistent effective inspections through the application of standard maintenance practices.

The organizational behavior of obtaining experienced feedback to continually update the maintenance protocols includes:

- Collecting information relating to the incidents and anomalies affecting the equipment
- Analyzing information
- Communicating the analysis to the various decision-making entities.

Preventive maintenance includes the development of maintenance rules adapted to component degradation. These maintenance rules are developed in the field by maintenance experts from the actual findings on in-service equipment and RAMS studies (Reliability, Availability, Maintenance, Safety). Preventative maintenance also includes developing a maintenance cycle that can be adapted to the appropriate HST technology, its use and behavior, and take into account the service life of each component. This cycle comprises five levels of inspection/maintenance efforts, carried out at predetermined intervals:

- Level I: In-Service Monitoring

Level II: Examinations

Level III: Periodic Inspections

Level IV: Overhauls

Level V: Accident Repairs and Modifications

Nonetheless, basing maintenance on a preventive philosophy does not preclude the necessity for corrective actions caused by:

- Unpredictable random failures
- Damage
- Misuse of the equipment

Level I: In-Service Monitoring

This concerns the monitoring actions carried out primarily by the train crews before departure, while en route or after arrival (tests, trials, verifications, etc.), in addition to the automatic on-board and on-ground monitoring devices.

Level II: Examination

These activities involve inspections, verifications, tests, quick replacement of components that can be replaced directly on the train set, and short-duration “interventions” that can usually be carried out quickly at a specialized site (outdoor, near the station) during agreed upon periods between two movements, so as not to disrupt the operational service schedule.

The most preventive quick maintenance tasks for TGV are the Examinations in Service (ES). They are conducted to detect any random anomalies that could affect the running gear, bogies, underbody components and pantographs. Correct performance of these in-service examinations, which are scheduled in the train movements, guarantees a high level of safety.

This examination is performed once every 5,000km maximum on a dedicated inspection track. One examination for a 10 to 12 car train set typically takes about 30 minutes.

The other quick maintenance tasks consist of:

- Emptying and filling the toilet system
- Filling water and sand
- On board exception report analysis
- Wheel set automatic measurement status check, and reprofiling if necessary

To further increase rolling stock availability, these maintenance tasks are performed during periods when the TGVs are not used for revenue service (day or night layovers).

Level III: Periodic Inspections

Periodic inspections require the use of a specialized workshop called a “depot” which is equipped with specific equipment and facilities.

The preventive maintenance cycle is organized around periodic inspections. The preventive maintenance operations for the TGV are:

- Comfort Examination (CE). The CE involves examining the interior fittings and all parts situated in the immediate environment of the passengers.
- Running Gear Inspection (RGI). The RGI is an in-depth examination of the axles and underbody components. It guarantees safety of train movements by identifying potential

phenomena that could affect the running gear as well as remedying any anomalies discovered on the connecting components.

- Inspections that essentially comprise the tests, verifications and checks that can lead to adjustments or the replacement of consumable parts. The three types of inspection are:
    1. Limited Inspection (LI),
    2. General Inspection (GI),
    3. Full General Inspection (FGI).
- Systematic Work on Train set (SWT). The SWT operations are performed at intervals different to those normally set for the inspections and meet the following objectives:
    1. Periodic work to be performed on certain components or functions,
    2. Seasonal work to be performed before, during or after a cold or hot season,
    3. Occasional work to be performed after certain interventions or certain short-term immobilizations.
- Other Scheduled Works (OSW). The OSW operations consist of component verifications or replacements that fall under systematic preventive maintenance performed at intervals spaced further apart than the FGI.

These inspections are performed on indoor dedicated inspection tracks, using the equipment appropriate to the inspection level required. Level III inspection cycles and durations are described in the table below:

Type	**Cycle**	**Duration**
Comfort Examination (CE)	Within 37 days	About 3 hours
Running Gear Inspection (RGI)	Within 37 days	About 3 hours
Limited Inspection (LI)	Within 7 months or less than 300,000 km operation from the last inspection	About 8 hours (on 1 working day)
General Inspection (GI)	Within 13 months or less than 600,000 km operation from the last inspection	About 16 hours (on 2 working day)
Full General Inspection (FGI)	Within 25 months or less than 1.200,000 km operation from the last inspection	About 50 hours (on 4 working day max)
Systematic Works on train set (SWT)	Depends on each SWT.	Depend on each SWT content
Other Scheduled Works (OSW)	More than 25 months	Depend on each OSW content

Level IV: Overhauls

Overhauls require the intervention of a specialized heavy maintenance shop, which is equipped with specific heavy duty equipment. These operations include the overhaul of components removed in the level I to III maintenance sites for:

- Component expert appraisal,
- Preventive maintenance purposes,
- Corrective maintenance purposes, or
- Heavy interventions on the car body structure called AC (Aesthetic Comfort) or HLO (Half-Life Operations). AC is performed every 7 to 10 years and typically takes about 30 days. HLO is performed every 15 to 20 years and typically takes about 45 days.

Level V: Accident Repair and Modifications

These operations are generally carried out by the level IV heavy maintenance shop and are divided into two major families:

- Repair of a train set which has suffered extensive damage,
- Incorporation of major modifications required to increase, equipment reliability, safety, and passenger comfort.

While these five maintenance levels define the core of an active equipment servicing operation, there are two additional levels of activity that constitute the balance of a formal and comprehensive maintenance plan. The plan begins with the commissioning activity, that is, car acquisition, assembly, testing, and acceptance When the end life of equipment is reached, it is subjected to a decommissioning or retirement from the system to make way for the next generation of rolling stock.

Cleaning

Interior and exterior cleaning of the rolling stock is intended to provide the customers with an appearance corresponding to their expectations. The frequency and extent of the cleaning operations are consequently determined by the following factors:

- Customer feedback
- Service guidelines
- Seasonal and climatic conditions
- Equipment utilization

There are different types of systematic cleaning operations:

- Service Soft Cleaning (SSC) – This is performed in the terminal station when the train set must turn without returning to a maintenance or layover site. This is a basic cleaning intended to return the interior to an appearance acceptable for the passengers.
- Service Normal Cleaning (SNC) – This is performed upon passage through a level II maintenance site each time the train set turns in a maintenance site and returns to revenue service. Normal cleaning is more consistent and thorough than soft cleaning owing to the fact it is performed at a maintenance site.
- External Washing of Train set (EWT) – This is performed in a level II maintenance site provided with a specialized, pass-through washing facility.
- Emptying of Water and Chemicals (WC) – This is performed in a level II or III maintenance site provided with a specialized used product recovery and new product procurement system.
- Normal Cleaning (NC) – This is a basic cleaning operation intended to return the interior to an appearance acceptable for the passengers. It is performed in a level II maintenance site.
- Depth Cleaning (DC) – This is a thorough cleaning operation resulting in an excellent degree of cleanliness of the space intended for the passengers. It is performed in a level III maintenance site.
- Major Cleaning (MC) – This is a very thorough cleaning or washing operation that may include disassembly or replacement of the comfort components in a level III maintenance site.

3.1.2 Heavy Maintenance Policy

The heavy maintenance facilities in France which are centrally located off the main line of the HST network at Hellemmes and Bischheim, served as the model for the Korean high speed system, areand are designed to support Level IV and V overhauls and repairs. To summarize, the activities associated with Level IV maintenance include:

- Aesthetic Overhaul (AC): This activity is performed approximately every 7 to 10 years and is sometimes referred to as the “renovation”. The train sets are thoroughly inspected and upgraded in term of interior fittings and exterior paint. This body reconditioning treatment, applied to an entire train set, is known as a "facelift". An aesthetic overhaul typically takes about 30 days to complete.
- Half Life Overhaul (HLO): Approximately every 15 to 20 years, train sets are given heavy treatment that involves inspecting and overhauling the car body steel structures, interior and exterior fittings, and paint. This body reconditioning treatment, applied to an entire train set, is known as a "second life". A half life overhaul typically takes about 45 days to complete.
- Train set and main component overhaul: Strict control of the in-service characteristics of the various functional components enables these components to be serviced as a function of individual cycles, independently of repair work concerning the entire train set. After the work is conducted at the heavy maintenance facility, the refurbished components are considered serviceable for a period of time not less than that of the original/new component.
- Other repairs: With the same quality objectives as those applied to TGV/, the heavy maintenance shop can also handle the repairs to main components common to several series of conventional rolling stock. This ability allows the facility to maximize maintenance resources available and to optimize facility investments.

Under French heavy maintenance protocols, Level V procedures include:

- Modifications: This activity involves upgrades to the train sets and technology with the objectives to improve rolling stock characteristics or reliability and to render trainset travel more attractive in terms of comfort or customer service.
- Accidents: As it implies, this maintenance activity focuses on repairs to trainsets that the result of extensive damage caused by an accident or act of nature.

Level V maintenance activities depend entirely on the operating company modification requirements or operating incidents (e.g. accidents) and are not a component of a maintenance schedule. As such, the duration of time it takes to perform Level V maintenance can vary depending on the extent of the maintenance required.

3.1.3 Maintenance and Layup Facilities

There are several TGV maintenance sites, according to maintenance level and service requirements.

- Sixteen level II maintenance sites are located at the French extremities of the service lines.
- Four level III maintenance depots are located at the PARIS extremity of each service line.
- Two level IV & V heavy maintenance shops are located at existing rolling stock maintenance yards and facilities.

The information presented in this section is largely summarized in tabular format to simplify the presentation of data regarding the size, capacity and capability of each of the 22 maintenance and layup facilities that service the TGV system.

The following Table 3.1.2 presents a list of each of the layup and maintenance facilities, which line they are associated with, the closest terminal station to the facility and what level of maintenance is supported at the facility.

Table 3.1.2 – Location and Capability of Maintenance Facilities in TGV System

Line	Facility	Nearby Station	Distance from the Station (Mile)	Maintenance Type
North	Paris Le Landy – Sud	Paris - Nord	1.9	Level II
	Lille	Lille - Europe Lille - Flandres	0.9	Level II
	Paris Le Landy – Centre	Paris - Nord	2.5	Level III
Atlantic	Paris Châtillon – Bas	Paris - Montparnasse	2.9	Level II
	Rennes	Rennes	1.9	
	Le Mans	Le Mans	1.9	
	Nantes	Nantes	1.2	
	Bordeaux	Bordeaux	0.6	
	Paris Châtillon – Haut	Paris - Montparnasse	3.1	Level III
East	Paris Ourq	Paris - Est	3.4	Level II & III
	Strasbourg Neudhorf	Strasbourg	1.9	Level II
South	Paris Charentons & Pasis XII	Paris - Lyon	1.6	Level II
	Lyon	Lyon	2.2	
	Chambery	Chambery	0.3	
	Toulouse	Toulouse	0.6	
	Bezier	Bezier	0.9	
	Marseille	Marseille	0.6	
	Nice	Nice	0.0	
	Paris Villeneuve St - Georges	Paris - Lyon	8.1	Level III
All Lines	Hellemmes	Lille	2.2	Level IV & V
	Bischheim	Strasbourg	2.1	

Table 3.1.3 – Size and Capacity of Inspection Facilities

Line	Facility	Parcel Size (Acre)	Approx. Fleet Size-Train Sets	# Layup Train Sets	Tracks (400 m / 200 m)				
					Storage	Outdoor Level II	Indoor Level II	Indoor Level III	Other
North	Paris Le Landy – Sud	19.8	115	30 to 50	8 / 0	7 / 0			4 / 0
	Lille	7.4		6 to 12	6 / 0				
	Paris Le Landy - Centre	24.7		30 to 50	5 / 0			3 / 12	
Atlantic	Paris Châtillon – Bas	49.4	130	50 to 60	18 / 0	6 / 0	8 / 0		1 / 0
	Rennes	4.9		5 to 8	0 / 8				
	Le Mans	4.9		4 to 8	4 / 0				
	Nantes	6.2		6 to 12	6 / 0				
	Bordeaux	4.9		4 to 8	4 / 0				
	Paris Châtillon - Haut	24.7		10 to 15				0 / 10	0 / 5
East	Paris Ourq	16.1	65	25 to 44	6 / 6	5 / 0		0 / 9	1 / 3
	Strasbourg Neudhorf	6.2		6 to 12	4 / 0	2 / 0			
South	Paris Charentons & Pasis XII	51.9	175	30 to 45	0 / 20		0 / 21		
	Lyon	7.4		8 to 16		8 / 0			
	Chambery	4.9		4 to 8	4 / 0				
	Toulouse	4.9		4 to 8	4 / 0				
	Bezier	2.5		2 to 4	2 / 0				
	Marseille	14.8		14 to 28	8 / 0	6 / 0			
	Nice	2.5		2 to 4	2 / 0				
	Paris Villeneuve St - Georges	44.5		20 to 30	0 / 6			3 / 12	0 / 5
All Lines	Hellemmes	74.1	485	2 to 5					0 / 5
	Bischheim	79.1		2 to 5					0 / 5

Size and Capacity of Facilities

The preceding Table 3.1.3 presents the storage capacity and physical size of each of the layup facilities within the TGV system. The table also breaks down the number of facility tracks by category of how many are dedicated to storage, level II inspections, level III inspections and other maintenance functions. This summary table presents a comparison of the approximate fleet to parcel size that is required to accommodate particular service levels at each layup facility.

Track Layout

Most maintenance facilities - no matter which level of maintenance is performed – are built on trapezoidal shaped parcels. Due to constraints in land availability, especially in Paris and other large cities where TGV train service is originated, most of the maintenance facilities were built on former conventional rail yard sites. This limits optimization of the land use within the facility parcel given that the shape of the parcel can not be changed.

The shape of the parcel dictates the track layout within the facility. To accommodate all facilities needed to support the TGV operation, layup tracks and other facilities are located parallel instead of in-line. That is, trains entering the facility proceed either to the storage tracks or over the inspection and maintenance tracks.

Facility Equipment

Beyond the physical space of the facility and the storage capacity is the equipment required to maintain and inspect the fleet of high speed trains. Table 3.1.4 below summarizes the equipment available at each of the maintenance and layup facilities in the TGV system. As can be ascertained from the table, not every facility provides sanding or toilet treatment services. Most of the locations that have servicing equipment are Level III facilities.

Table 3.1.4 – Facility Equipment

Location	Equipment						
	Trainset Washing	Wheelset Measurement Bench	Wheelset Underground Lathe	Drop Table	Simultaneous Lifting Jacks	Auto Toilet Treatment	Automatic Sand Dispenser
PARIS "Le Landy - Sud"	o	o				o	o
LILLE							
PARIS "Le Landy - Centre"		o	oo	oo	o		
PARIS "Châtillon - Bas"	o	o				o	o
RENNES							
LE MANS							
NANTES							
BORDEAUX							
PARIS "Châtillon - Haut"			oo	o	o		
PARIS "Ourq"	o	o				o	o
STRASBOURG "Neudhorf"							
PARIS "Ourq"			oo	o	o		
PARIS "Charentons & Paris XII"						o	o
LYON							
CHAMBERY							
TOULOUSE							
BEZIER							
MARSEILLE							
NICE							
PARIS "Villeneuve St-Georges"	oo	o	oo	o	o		
HELLEMMES	o						
BISCHHEIM	o						

3.1.4 Heavy Maintenance Facility Configuration and Capacity

Unlike the Level I, II and III terminal facilities, the Level IV and V heavy maintenance facilities are comprised of several specialty shops within the main maintenance building and several outside support facilities and tracks. The shops typically located inside the main workshop building include:

- Entrance train set shop
- Car-body shop
- Car-body Pretreatment & Painting Shop
- Heavy (weight) components shops
- Light (weight) components shops
- Unitary Test shop (simulator)
- Exit test train set shop (generally common shop with Entrance train set shop)

Additional workshop buildings that are located in close proximity to the main workshop can include:

- Wheelset shop: (Also possible to locate inside the main workshop Building or inside a Level III maintenance depot)
- Automatic Warehouse

The support facilities that are typically located outside of the main workshop building include:

- Exterior cleaning (Automatic washing machine)
- Stabling Yard to park train sets
- Dynamic Test track (low speed)
- Tracks in-transfer-out-system

A typical layout for a heavy maintenance facility that incorporates the components and functions presented above may look something similar to the diagram presented below.

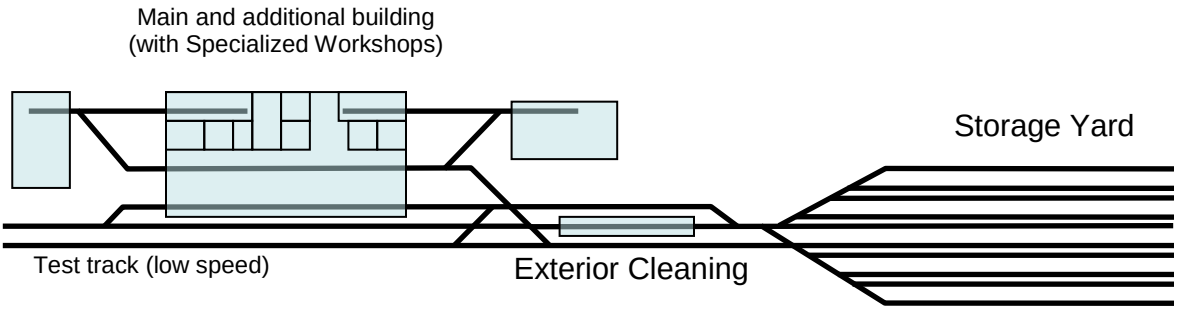

Specialty Shops and Their Functions

To understand the special requirements of each of the specialty shops, it is important to review the activities typically performed within each shop.

Entrance Shop: This shop performs the tasks required to uncouple and disassemble the train set, and includes emptying retention tanks and sand and downloading information from the OBCS (On board Computer System).

- The Car-Body Shop: Each car brought into the car-body shop has the interior fitting parts and seats removed, inspected and repaired if necessary before reinstallation. Accessibility is allowed on both sides of the car to facilitate work on the extremities and under-frame of the car-body.
- The Car-Body Pretreatment & Painting Shop: In the car-body pretreatment and painting shop the under-frame and extremities of each car are washed and sand-blasted, a detailed inspection is performed on the steel structure and necessary repairs are conducted to the frame and body shell (cutting, welding, grinding, patching etc.) before the car is primed and painted.
- Heavy Components Shops: The heavy components shop is made up of several sub-shops that focus on the bogies articulated system (Bogie frame and the two “Gangways”) including a wheel set shop to overhaul wheel sets and subcomponents, heavy electric components (transformer, power unit, traction motor, etc.), heavy mechanical components (Motor reduction unit, buffer, coupler, etc.), pneumatic components (brake cylinder, compressor, dryer, etc.), and batteries.
- Light Components Shops: The light components shop focuses on comfort components (Seating, interior fittings, air conditioning units, sanitary equipment, etc.) and electronics components (contactor, circuit boards, arresters, etc.)
- Unitary Test Shop: This shops conducts a series of tests on the trainset components and cars, that include:
    - Insulation Tests, which check the discontinuity of wires/cables.

- Continuity Tests that test to verify the continuity and discontinuity of wiring by supplying electricity.
- Network Tests to inspect the normal function of OBCS network.
- Functional Tests on inspect the trailer OBCS computer, comfort equipments (Passenger Information display, charger and inverter, Air Conditioning Unit, Lighting, Interphone, sound and video), and safety and security equipment (Access door, Anti-slide, Brake device, Fire detection).

- Exit Test Shop: This shop is similar to the "entrance shop", as it is the final shop that focuses on coupling and assembly of the trainsets. Within this shop, after the trainsets are reassembled, continuity and OBCS tests are performed, functional tests are conducted on the OBCS computer, comfort components (passenger information displays, electrical chargers and inverters, HVAC units, lighting, intercoms, sound and video), safety and security components (access doors, brakes, fire detection), water tanks and sandboxes are refilled and radio communication tests (train control system, signaling) are performed.

Heavy Maintenance Facility – Train Set Capacity

The number of train sets at a time that can be stored at the heavy maintenance facility for inspections and repairs is typically six trains for the two French heavy maintenance facilities. The Korean high speed rail heavy maintenance facility that is currently under construction will house nine two-hundred meter train sets.. The breakdown of how the train sets are stored at these facilities is provided below.

- French "Bischheim" workshop:
  - 1 TGV on indoor Entrance and Exit test track
  - 3 TGV uncoupled, indoor, work under progress
  - 1 TGV on parking yard outdoor
  - 1 TGV on outdoor test track
- French "Hellemmes" workshop:
  - 1 TGV on indoor Entrance and Exit test track
  - 2 TGV uncoupled, indoor, work under progress
  - 1 TGV coupled, indoor, work under progress
  - 1 TGV on parking yard outdoor
  - 1 TGV on outdoor test track
- Korean "Goyang" workshop:
  - 1 KTX I (400 meters configuration) or 2 KTX II (200 meters configuration) on indoor Entrance and Exit test track
  - 2 KTX II or 1 KTX I and 2 KTX I or 4 KTX II uncoupled, indoor, work under progress
  - 1 KTX on outdoor test track

In total, a typical heavy maintenance building in France has a total size between 19.8 to 24.7 acres (861,000 to1,080,000 ft^2) to support a fleet size of around 200 TGV train sets. This size does not include the buildings that already existed for historic reasons. The total average size of a heavy maintenance facility is around 61.8 acres (2,692,000 ft^2).

The number of train sets that can be cycled through these facilities each year varies on the type and duration of the work required for each level of work. A summary table is provided below that shows the flow of trains through the heavy maintenance facilities under typical situations.

Heavy workshop		**Level IV**			**Level V**		**Level IV**			**Level V**	
Name	**Train Set type**	**AO**	**HLO**	**Test**	**Modification**	**Accident**	**AO**	**HLO**	**Test**	**Modification**	**ACIdent**
		2006					**2007**				
Bischheim	TGV Sud Est				1	1				9	
	TGV Atlantique	1	3	7				8	9		
	TGV POS				11					8	
	TGV Reseau	11					8			4	
	TGV Duplex					1					
	TGV Thalys					1					
		12	3	7	12	3	8	8	9	21	0
		2006					**2007**				
Hellemmes	TGV Atlantique						5	1			
	TGV Reseau	24					10				
		24	0	0	0	0	15	1	0	0	0

3.2 JAPAN RAIL GROUP (JR)

Shinkansen is the world's oldest and most heavily utilized high-speed rail system with services operating in Japan since 1964. Starting from the Tokaido Shinkansen Line, connecting Tokyo and Osaka via Tokaido Corridor, the network has been expanded from Tokyo north to Hachinohe, Aomori and Niigata, northwest to Nagano, and west to Fukuoka on Kyushu Island. Today, the system operates six lines with a total coverage of 2,175 kilometers (1,351 miles). On the busiest Tokaido Shinkansen Line, nearly 300 revenue trips are operated every day, which generates nearly 11 billion dollars of revenue each year.

The safety record of the Japan Rail Group is notable in that it has experienced no passenger fatalities resulting from train operations since the system began in1964. The on-time performance presents an annual average delay, including delays caused by "acts of God", of less than one minute. This performance record is due in large part to the advanced design of the signaling system, the dispatching and fail-safe technologies, and rigorous, well disciplined vehicle and track maintenance procedures.

Due to a wide variety of geographic, operational, and meteorological features, different types of train sets are used for each Shinkansen line and the two standard-gauge (US narrow-gauge) conventional lines that provide through service to the Shinkansen (Mini-Shinkansen). For instance, train sets used on the Tokaido-Sanyo Shinkansen Lines are all 400-meter, 16-car train sets with a seating capacity of 1,323 because of the operational flexibility and very high demand throughout the day. On the other hand, vehicles on the Tohoku, Joetsu, and Nagano Shinkansen Lines are required to operate in freezing temperatures and heavy snow and still support passenger volumes during peak and off-peak periods that is greater than that on Tokaido-Sanyo Line. A list of the rolling stock currently in operation is presented in Table 3.2.1 below.

Table 3.2.1 - Currently Used Shinkansen Train Sets

Series	Lines	# Cars	Length (Meter)	Seats	Speed (km/h)	Note
100	Sanyo	4 or 6	100 (4 car) 150 (6 car)	N/A	220	Local service only
300	Tokaido Sanyo	16	400	1,123+*200*	270	
500	Sanyo	8	200	608	300	Local service only
700	Tokaido Sanyo	16	400	1,123+*200*	285	8-car, 200 meter set used by JR West
N700	Tokaido Sanyo	16	400	1,123+*200*	270 (T) 300 (S)	1-degree tilting
200	Tohoku Joetsu	10	250 (10 car)	N/A	240	
E1 (Bi-Level)	Joetsu	12	300	1,123+*102*	240	
E2	Nagano Tohoku	8 (N) 10 (T)	200 (6 car) 250 (10 car)	630 (8 car) 814 (10 car)	260 (N) 275 (T)	Automatic coupler equipped Dual frequency (50/60 Hz)
E4 (Bi-Level)	Tohoku Joetsu	8	200	763+*54*	240	Automatic coupler equipped
400 (Mini)	Yamagata	7	140	379+*20*	240 (Shinkansen) 130 (Conventional)	Automatic coupler equipped Dual voltage (20/25 KV)
E3 (Mini)	Akita Yamagata	6 (A) 7 (Y)	120 (6 car) 140 (7 car)	315+*23* (6 car)	275 (Shinkansen) 130 (Conventional)	Automatic coupler equipped Dual voltage (20/25 KV)
800	Kyushu	6	150	392	260	

Note: Italics are seating capacity for "Green Car" (business class)

3.2.1 Maintenance Inspection Overview

To provide and maintain a safe and reliable high-speed service, rolling stock has to be maintained to a high level. For the Shinkansen system, this is achieved through very strict preventive maintenance and inspection procedures. The train sets and components are inspected frequently to find even a "small" anomaly and to replace a component before the expected functional life of the part ends. If a worn or malfunctioned part is found during the inspection, the train set is taken out of service to get the part(s) replaced with new or rebuilt ones.

The maintenance cycles and procedures are prescribed by The Ministerial Order for Railroad Technical Standard released by the Ministry of Land, Infrastructure, Transport, and Tourism (MLIT). Although MLIT allows railroad operators to be creative and flexible on maintenance procedures up to a certain extent, MLIT closely monitors and supervises each operator, who is mandated to perform the inspections. MLIT also has the authority to give a warning to an operator when they find that the maintenance procedures of the operator do not sufficiently prevent safety hazards or malfunctions. If the operators do not change and improve their procedures after receiving the warning, MLIT has the authority to suspend or terminate the railroad operating license.

Based on the Ministerial Order, the Japan Rail group of companies (JR), operators of the Shinkansen service, perform five types of inspections. Each inspection level addresses a different cycle, coverage, and procedure. These levels are:

- Shigyo Kensa (Pre-departure Inspection)
- Koban Kensa (Fundamental Inspection)
- Daisya Kensa (Bogie Inspection)
- Zempan Kensa (Full Inspection)
- Rinji Kensa (Other Inspection)

Pre-Departure Inspection

Pre-Departure Inspections are the most basic and frequently-performed inspections that check the state of all main components. During the inspection, crews visually check each main component and its functionality, such as the pantographs, electrical components, bogies, door engines, and on-board electric devices. Since this is a brief, semi-daily inspection, no disassembly is performed. Inspection crews walk the train set with a hammer to visually and phonically inspect the main components. Restocking and replacement of expendables, as well as toilet servicing, also takes place during this inspection.

This inspection is performed no less than once every two days on an enclosed inspection track. Actually frequency of the inspection depends on the train set usage, mileage, and condition. One inspection for a 16-car, 400-meter train set typically takes about fifty minutes.

Fundamental Inspection

Fundamental Inspections are the second most frequently-performed inspections and provide a more thorough check of all essential components. The maintenance/inspection crews inspect a broader range of components compared to the pre-departure inspection, such as super high-voltage circuits, main circuits, master control circuits, braking system, meters, and insulation of electric circuits, as well as other components checked in the pre-departure inspection. In addition, wheels on the train set are re-profiled during this inspection.

The Ministerial Order mandates operators perform the fundamental inspection at least once within thirty days or every 30,000 kilometers, whichever comes first. One inspection for a 16-car, 400-meter trainset takes about 3.5 hours on an enclosed inspection track.

Bogie Inspection

Bogie Inspections focus on detailed inspections of the bogie and traction components of the rolling stock. According to the requirements, bogie inspections must take place no less then every eighteen months or every 600,000 kilometers, whichever comes first. An 8-car, 200-meter train set typically spends 9 hours at an enclosed inspection track for bogie replacement. After the inspection, post-inspection test runs are required before the train set goes back into revenue service.

Full Inspection

Full inspections are detailed inspections that inspect every component of the rolling stock. Operators are mandated to perform a full inspection once every three years or 1.2 million kilometers, whichever comes first. The entire process for a 16-car, 400-meter train set typically takes ten days. Since the inspection requires disassembly, post-inspection test runs are mandated before the train set goes back into revenue service.

Other Inspections

In addition to the four-step vehicle inspections, there are other inspections that are either focused on specific components or performed whenever they are perceived as necessary.

- ATC Brief Check is performed to visually check the functionality of the on-board Automatic Train Control (ATC) components without any disassembly. This inspection must be performed on each train set once every 48 hours.
- ATC Inspection is a more detailed inspection focused on the on-board ATC components. During the inspection, the components are dissembled and inspected in more detail. This inspection is performed at a special facility once every 60 days or 40,000 kilometers, whichever comes first.

When necessary, two kinds of non-periodic inspections are performed. In-service Operation Inspection is performed when the train set is in operation by an inspection crew, who reviews the state of the train in motion, such as acceleration, deceleration, vibration, and functionality of each component. A Special Inspection is performed when inspection is required after non-typical repairs or maintenance, such as post-accidental repair. This inspection usually takes place at a special location.

Furthermore, the Shinkansen train sets are equipped with on-board computers that have the capability of performing diagnostic checks and continuous monitoring of every component on the train. The monitoring data is stored and retrieved at the maintenance facility and is reviewed and applied to the inspection and preventive maintenance practices.

Cleaning

Quick cleaning usually takes place between two revenue service trips at the terminal stations. As soon as the passengers alight from the train, cleaning personnel board with quick cleaning equipment, new headrest covers, and trash receptacles to clean the passenger compartments of the train. During this process, conductors walk through the train to check for lost articles and other materials left behind by passengers. When the cleaning process is complete, all the seats are turned so that passengers can seat toward the running direction. This entire process takes no more than 15 minutes, including alighting and boarding of passengers.

Other cleaning processes, which are more intensive and time-consuming, take place during the inspections mentioned above. For instance, exteriors of the vehicles are washed by train washing machine located at the layup and maintenance facilities.

Brake Test

There are no mandatory walking brake tests required at the terminal stations. Since the Japanese implemented the system with multiple power units with an electrically commanded braking system developed in the early stages of the railroad's development, they are not suitable for frequent coupling and uncoupling. Shinkansen train sets, in particular, are equipped with ECP brakes and an on-board monitoring system that can perform continuous diagnostic checks for each component of the braking system. These technologies have minimized the necessity of end-terminal brake tests and allow operators to shorten the terminal dwell/turnaround time. In the Ministerial Order, a detailed brake test is only required after a train set is reassembled following heavy maintenance or repairs.

3.2.2 Heavy Maintenance Policy

The two primary types of services conducted at the heavy maintenance facilities in Japan are Bogie and Full Inspections. The activities involved with these services are summarized in more detail below.

Bogie Inspection

Bogie Inspections are the first heavy maintenance function that requires disassembly of the vehicle components. During this inspection, bogies are disassembled into individual components for a detailed inspection and refurbishment. Typically, an 8-car train set spends approximately 9 hours at a heavy maintenance facility to allow each bogie to be removed and inspected. When necessary, new or previously refurbished bogies are substituted on the train set if it is found the original bogie requires extensive repair. This interchangeability of the bogie and components allows the trainset to be quickly and efficiently cycled back into the operating schedule.

Bogies that have been removed from the train sets are disassembled into their individual components, namely, axles, bearings, brake components, frames, and motors and sent to different inspection lines where each component is assessed in detail. Motor bearings and shocks are disassembled for inspection, cleaning, and reconditioning. Axles and frames are sent to specialty

shops where ultrasound and ultraviolet (UV)-reflective magnetic particle tests are performed. Brake components are sent to the brake inspection shop for assessment and reconditioning.

The reconditioned bogies are reattached to the train set before final adjustments are made. These final adjustments occur following the dynamic and post-inspection tests. If the results of the test runs are acceptable, the train set returns to regular operations.

All train sets are required to go through this process once every 18 months or every 600,000 kilometers, whichever comes first.

Full Inspection

Full Inspections are the most extensive and detailed procedure in the Shinkansen maintenance protocols. During this 10-day inspection, which takes place at designated heavy maintenance facilities, all components of the vehicle are disassembled, inspected, and reconditioned once every 36 months or 1.2 million kilometers, whichever comes first.

The train sets are disassembled into individual components at the assembly shop. Some components, such as those for the passenger cabin interior, air conditioning system and electric controller units, are left at the assembly shop for the detailed inspection and reconditioning whereas the vehicle bodies are sent to the body shop, while all electrical components, such as pantographs, door engines, compressors, and on-board signal processors are inspected and reconditioned at the electrical shop.

Once each trainset has been reassembled, each car must pass a vehicle air-tightness and electric leak-proof test to proceed to bogie attachment and final adjustments on the lift track.

After bogies are attached and final adjustments are performed, all train sets are required to undergo a dynamic intra-facility test followed by test runs on the main track at operating speeds before they are returned to revenue service.

3.2.3 Maintenance and Layup Facilities

Due to high population density, geological characteristics, and station area land use, maintenance and layup facilities for the Shikansen vehicles cannot be located adjacent to the stations. Instead, most facilities are located more than one mile away from the nearest passenger station, most at locations that were former freight yards or layup/maintenance facilities for standard-gauge (US narrow-gauge) conventional railroad vehicles. In the Shinkansen system, maintenance and layup facilities can be categorized into the following four categories.

Layup Tracks

Layup tracks are facilities that only have the capability of storing a few train sets necessary for supporting the morning start-up the following day or for a certain period of time during the mid-day. Since these tracks are exclusively for layup, there is no built-in facility to perform any of the inspections mentioned above; the equipment rotation accommodates these layups at layup-only facilities so that the train set can be inspected at the appropriate time.

Intermediate Layup Facility

Intermediate layup facilities are located near key intermediate stations to accommodate layup, pre-departure inspection, and light maintenance to support train sets required for morning service. Typical intermediate layup facility has 10 to 20 storage tracks for layup, a few enclosed inspection tracks which have capability of pre-departure inspection and light maintenance, and car washing machine. Most intermediate layup facilities also have a crew reporting facility and “dormitory” for both maintenance and operation crew working on overnight shift.

End-line Terminal Layup and Maintenance Facility

Located near end-line terminals, these layup/maintenance facilities provide all the support functions of intermediate layup facilities with the added feature of performing heavier inspections and maintenance necessary to accommodate fundamental inspections The number of inspection tracks at this type of facility are slightly higher (5 to 10 tracks) than those provided at intermediate layup facilities and wheel re-profiling machines are available. Larger layup tracks and crew supporting buildings are also located as part of the end-line terminal layup and maintenance facilities.

Heavy Workshop

Heavy workshops are where inspections and maintenance are performed that require disassembly of major components of the trainset. Due to the size of the buildings necessary to provide this service, heavy workshops are located near intermediate stations instead of terminal locations, where larger land parcels are more available. Heavy workshops typically have layup tracks and fully enclosed workshop buildings equipped with heavy machinery, such as traversers, heavy lifts, welding shops, and paint shops. A more thorough explanation of the functions and requirements of the heavy workshops is provided in Section 3.2.4 later in this chapter.

The location and type of inspection performed at each facility is presented in Table 3.2.2 on the following page.

Table 3.2.2 – Location and Capability of Each Inspection/Maintenance Facility in Shinkansen System

Company	Line	Facility	Nearby Station	Type	Distance from the Station (Mile)		Inspections				
					Main	Lead	Pre-Departure	Fundamental	Bogie	Full	Special
JR Central	Tokaido	Tokyo 1st Rolling Stock Depot	Tokyo Shinagawa	End-Line Terminal Layup	3 (Tokyo) 1 (Shinagawa)	3	O	O			
		Tokyo 2nd Rolling Stock Depot					O	O			
		Mishima Rolling Stock Depot	Mishima	Intermediate Layup	0		O				
		Shizuoka Layup Track	Shizuoka	Layup Track	2	0					
		Hamamatsu Maintenance Shop	Hamamatsu	Heavy Workshop	2.3	0.9				O	O
		Nagoya Rolling Stock Depot	Nagoya	Intermediate Layup	0	1.8	O				
		Osaka 1st Rolling Stock Depot	Shin-Osaka	End-Line Terminal Layup	4.7	0	O				
		Osaka 2nd Rolling Stock Depot						O			
		Osaka 3rd Rolling Stock Depot							O		O
JR West	Sanyo	Okayama Shinkansen Rolling Stock Depot	Okayama	Intermediate Layup	1.3	0	O				
		Hiroshima Shinkansen Rolling Stock Depot	Hiroshima	Intermediate Layup	1.8	0	O				
		Hakata Rolling Stock Depot	Hakata	Heavy Workshop	0	5.5	O	O	O	O	O
JR East	All JR East Lines	Ueno Shinkansen Depot	Tokyo Ueno	End-Line Terminal Layup	4 (Tokyo) 1.8 (Ueno)	0	O				
		Shinkansen Rolling Stock Center	Sendai, Miyagi	Heavy Workshop	0	5.6	O	O	O	O	O
	Tohoku	Oyama Shinkansen Rolling Stock Depot	Oyama	Intermediate Layup	N/A		O				
		Nasu-Shiobara Layup Track	Nasu-Shiobara	Layup Track	1	0					
		Morioka Shinkansen Rolling Stock Depot	Morioka	Intermediate Layup	N/A		O	O			
		Morioka Depot - Hachinohe Branch	Hachinohe	Intermediate Layup	N/A		O				
		Aomori Center (Under Construction)	Aomori	Intermediate Layup	N/A		O				
	Joetsu	Niigata Shinaksen Rolling Stock Center	Niigata	End-Line Terminal Layup	0	2.6	O	O			O
	Nagano	Nagano Shinkansen Rolling Stock Center	Nagano	End-Line Terminal Layup	0	2.5	O	O			O
	Yamagata	Yamagata Rolling Stock Center	Yamagata*	(Conventional)	N/A		O	O			O
		Shinjo	Shinjo*	(Conventional)	N/A		O				
	Akita	Akita Rolling Stock Depot	Akita*	(Conventional)	N/A		O	O			O
JR Kyushu	Kyushu	Sendai Rolling Stock Depot	Sendai, Kagoshima	Intermediate Layup	0.5	0	O	O	▲	▲	

Typical Design and Layout of the Facility

For the Shinkansen system, almost all maintenance facilities are built on very long and narrow parcels located near the main tracks. Typically, the size of the property for intermediate and end-line terminal layup/maintenance facilities, which can accommodate layup tracks for 15-30 train sets and 5-10 inspection tracks, is around 1.5 miles long by 0.2 mile wide. To maximize the land utilization, layup and inspection tracks are laid in line; from the lead track, layup tracks are located in front of inspection tracks. Car wash machines are usually located on connecting tracks between layup and inspection tracks.

This long and narrow layout allows the facility to function in a very efficient manner, with limited space. For instance, Ueno Shinkansen Depot in Tokyo, located on a narrow piece of land between an urbanized area and a passenger vehicle yard for standard-gauge conventional lines, has the layup tracks and inspection building located underneath the elevated main track structures.

The number of tracks that serve each function at these facilities is determined based on the maintenance cycles, fleet size, and operation plan. Although there is no statistical data showing the capacity and utilization of the facilities, it is unusual for layup facilities to reach full capacity given that reduction in travel time since the privatization of Japan National Railway has helped to reduce the entire fleet size by encouraging more efficient utilization of rolling stock to reduce cost. However, the demand for maintenance on each trainset has increased as a result of the increase in daily travel distances for each train set associated with the improved utilization of rolling stock, which shortens the maintenance cycle.

The size and capacity of each facility is described in Table 3.2.3 below.

Table 3.2.3 – Size and Capacity of Inspection Facilities

Facility	Layout	Parcel Size (Mile)		Tracks				
		Max. Length	Max. Width	Layup	Pre-Dept	Fund	Bogie /Full	Other
Tokyo 1st Rolling Stock Depot Tokyo 2nd Rolling Stock Depot	In-Line	1.7	0.09	38	12			11
Mishima Rolling Stock Depot	In-Line	1.5	0.05	14	3			2
Shizuoka Layup Track	(Layup)	0.45	N/A	2				
Hamamatsu Maintenance Shop	Parallel	0.6	0.4					
Nagoya Rolling Stock Depot	In-Line	0.85	0.04	11	3			
Osaka 1st Rolling Stock Depot Osaka 2nd Rolling Stock Depot Osaka 3rd Rolling Stock Depot	In-Line	1.4	0.1	37	9		2	11
Okayama Shinkansen Rolling Stock Depot	Parallel	0.45	0.05	14	2			1
Hiroshima Shinkansen Rolling Stock Depot	Parallel	0.45	0.08	8	2			1
Hakata Rolling Stock Depot	In-Line	1.05	0.15	27	7		2	11
Ueno 1st Shinkansen Depot	In-Line	1.1	0.08	18	3			
Shinkansen Rolling Stock Center	In-Line	1.9	0.16	16	5		5	13
Oyama Shinkansen Rolling Stock Depot	N/A	N/A		7	2			1
Nasu-Shiobara Layup Track	(Layup)	0.45	0.06	4				
Morioka Shinkansen Rolling Stock Depot	N/A	N/A		6	2			1
Morioka Depot – Hachinohe Branch	N/A	N/A		2	1			
Niigata Shinaksen Rolling Stock Center	In-Line	1.07	0.09	14	6			4

Facility	Layout	Parcel Size (Mile)		Tracks				
		Max. Length	Max. Width	Layup	Pre-Dept	Fund	Bogie /Full	Other
Nagano Shinkansen Rolling Stock Center	In-Line	1	0.04	11	3			3
Yamagata Rolling Stock Center	*N/A*	*N/A*						
Shinjo	*N/A*	*N/A*						
Akita Rolling Stock Depot	*N/A*	*N/A*						
Sendai Rolling Stock Depot	Parallel	0.5	0.1					

Note: "N/A" represents facilities for narrow-gauge conventional vehicles. Only Mini-Shinkansen rolling stocks are inspected at these locations.

Maintenance and Operation

In the Shinkansen system, the operation plan is optimized based on the location of the maintenance facility and other planned requirements. Because of the absolute "black-out" maintenance window between midnight and 6 AM, no revenue trains can operate during this time except for those that may have been delayed due to "acts of God" and/or special service requirements. To provide for early-morning arrival and late-evening departures at terminal stations, many start-up and close-down local revenue trains starting or terminating at intermediate stations located near the layup/maintenance facilities are instead dispatched as deadhead train movements.

For instance, JR Central operates many revenue start-up trains from stations near intermediate facilities, namely, from Mishima and Nagoya to Tokyo and Osaka, during morning peak hours. These start-up services are heavily used by business travelers who need to attend early morning meetings in Tokyo and Osaka or commuters who prefer not to live in the Tokyo Metropolitan Area due to high living costs and overcrowded commuter rail service. In addition, between Hakata Station and the Hakata Rolling Stock Depot, JR West offers a special short-distance service on some deadhead train sets traveling on the lead track of the layup/maintenance facility. These services benefit customers and the communities around the maintenance facilities by providing convenient and high-speed commuter-friendly service while at the same time providing the operators with additional revenue from these short-distance passengers and a capital cost savings by not requiring a large parcel of land in a prime location near the terminal stations for the layup/maintenance facility.

There are many cases in the Shinkansen system where access to facilities is limited so that all deadhead trains have to run on the main tracks to enter into or exit from the lead tracks of these facilities. This has been an issue in the Tokyo and Osaka areas, where track capacity is constrained due to high revenue train traffic and deadhead moves from/to the facility which they have to accommodate. In these cases, layup tracks are added at terminal stations, or a new through-line terminal station where layup tracks at the "end" are built near a junction of a mainline track and lead tracks in order to add revenue service without creating further dispatching conflicts. On lines which were built recently, this issue was resolved by building layup facilities outside of Tokyo to utilize the track capacity while avoiding possible constraints.

3.2.4 Heavy Maintenance Facility Configuration and Capacity

For the Shinkansen system, heavy inspection and maintenance is performed at each of 5 facilities centrally located throughout the network and immediately adjacent to the main line tracks of the system.. All of them are located near key passenger stations, but far enough from the station to easily acquire the land necessary to accommodate the necessary activities and functions. All of these facilities, except Hamamatsu Workshop on Tokaido Shinkansen Line, have layup and light inspection/maintenance capability. The facilities are built on parcels that are long and somewhat wide to accommodate adequate layup tracks for train sets as well as the facilities required to perform the maintenance. In addition to the functional requirements, each specialty shop at the facility is lined up

in sequence so that switching movements can be minimized while dynamic tests are performed on vacant tracks inside of the facility. A typical heavy maintenance facility is comprised of 10 to 15 layup tracks with 3 to 4 light inspection and maintenance tracks, with the overall facilities typically around 1.5-miles long by 0.2-mile wide.

Location, parcel size, and inspection capability are summarized in the Table 3.2.4 below.

Table 3.2.4: Existing Heavy Maintenance Workshop in Shinkansen System

Company		**JR Central**		**JR West**	**JR East**	**JR Kyushu**
Line		**Tokaido**		**Sanyo**	**All JR East Lines**	**Kyushu**
Facility		**Hamamatsu Maintenance Shop**	**Osaka 3rd Rolling Stock Depot**	**Hakata Rolling Stock Depot**	**Shinkansen Rolling Stock Center**	**Sendai Rolling Stock Depot**
Nearby Station		**Hamamatsu**	**Shin-Osaka**	**Hakata**	**Sendai, Miyagi**	**Sendai, Kagoshima**
Distance from the Station (Mile)	Main	2.3	4.7	0	0	0.5
	Lead	0.9	0	5.5	5.6	0
Inspections	Pre-Departure			✓	✓	✓
	Fundamental			✓	✓	✓
	Bogie		✓	✓	✓	▲
	Full	✓	✓	✓	✓	▲
	Special	✓	✓	✓	✓	
Parcel Size	Max. Length (Mile)	0.6	1.4*	1.05	1.9	0.5
	Max. Width (Mile)	0.3	0.1*	0.15	0.16	0.1
	Area (Acre)	115.2	89.6*	100.8	194.6	32
Tracks	Layup		37*	27	16	
	Pre-Dept		9*	7	5	
	Fund.					
	Bogie/Full		2**	2***	5	
	Other		11*	11	13	

Note: ▲:Some bogey and full inspection for Kyushu Shinkansen rolling stocks are performed in Kagoshima Maintenance Facility

**: Combined number of 1st, 2nd, 3rd Depot in Osaka (Located in the same parcel)*
***: Tracks are for Bogie inspection which does not require replacement bogeys*
****: Tracks are for Bogie inspection which require replacement bogeys*

Most Shinkansen heavy maintenance facilities can be broken down into three shops: assembly shop, body shop, and bogie shop. In a typical layout, these shops are lined up on one side of the building footprint from the switching, light inspection and maintenance tracks and administration buildings. This allows utilization of the switching tracks without interference from the maintenance shops as well as provides for easy access to the layup tracks and at least one mile of track for conducting low-speed dynamic tests within the facility property. At facilities where there is not sufficient space to construct a specific track for dynamic tests, the facility lead tracks are typically used.

The size of each shop within each of the Shinkansen heavy maintenance facilities is presented in Table 3.2.5 on the following page.

Table 3.2.5: Size of Shop Buildings at Shinkansen Maintenance Facilities

Facility		Hamamatsu Maintenance Shop	Osaka 3rd Rolling Stock Depot	Hakata Rolling Stock Depot	Shinkansen Rolling Stock Center	Sendai Rolling Stock Depot*
Bogie Shop	Length		1,490	970	1,450	
	Width		380	360	380	
	Area (Sq.Ft.)		566,200	349,200	551,000	
Assembly Shop	Length			520	500	
	Width			340	560	
	Area (Sq.Ft.)			176,800	280,000	
Body Shop	Length			310	500	
	Width			310	300	
	Area (Sq.Ft.)			96,100	150,000	

*Note: *: Only assembly and disassembly are performed at Sendai Rolling Stock Depot; components are shipped to nearby narrow-gauge conventional line rolling stock facility for detailed inspection and heavy maintenance*

Case Example: JR East Shinkansen Rolling Stock Center

The JR East Shinkansen Rolling Stock Center is a heavy maintenance facility for all 152 Shinkansen train sets (1,303 cars) used in all JR East Shinkansen lines including 2 “Mini Shinkansen”. Locating 5.6 miles north of Sendai Station, one of the key intermediate station in the system, the facility is capable of providing not only heavy maintenance and inspection, but also layup and light maintenance activities to support start-up, shut-down, and short-distance shuttle services.

Figure 3.2.6: Typical Layout of Heavy Maintenance Facility in Shinkansen System

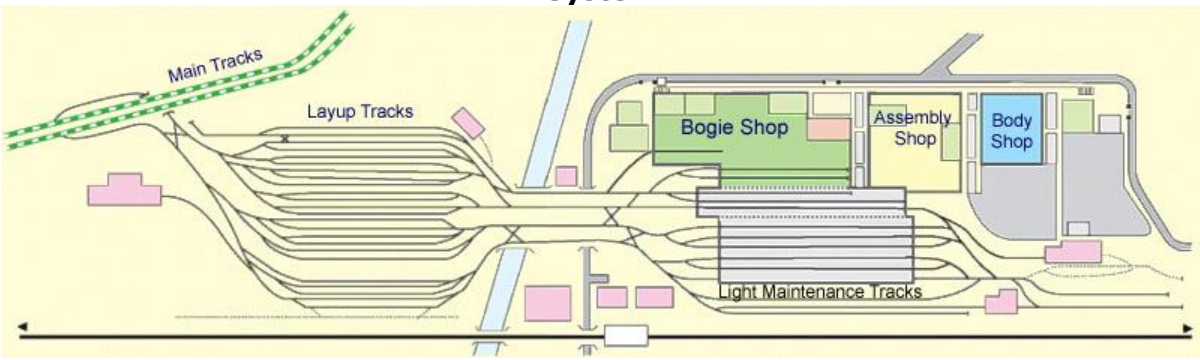

Source: JR East Shinkansen Rolling Stock Center

The facilities reside in a 1.9-mile long parcel of approximately 190 acres. The largest of the heavy maintenance shops inside of the facility is the multi-level bogey shop, where heavy lifts and special transporters remove and attach bogies and ship them to an inspection and refurbishment area. While most activities related to bogie inspections and maintenance take place within sub-shops on the ground floor, maintenance for brake-related components are performed in the pneumatic/brake sub-shop located on the second floor. Within the bogie shop, tests are also conducted by high-speed rotors to simulate the condition of bogies at operating speeds after the bogie reconditioning process. The approximate size of this 2-story bogey shop is 1,450 feet wide by 400 feet (or 550,000 ft^2).

The assembly shop is the building located next to the bogie shop. In this 500 feet by 560 feet (280,000 ft^2) building, assembly and disassembly of the primary vehicle components is performed

with the support of overhead cranes and special lifts. While some components stay in the assembly shop, the main electric components are sent to the electrical sub-shop, located on the second floor of the assembly shop. Once the inspection and maintenance is finished, all of components (except the bogies) are brought back to the shop for reassembly.

Static tests such as electrical insulation and pressure tests are performed after the reassembly process is completed. High-voltage generators and special air pressurizing machines are installed inside of the assembly shop to perform these static tests.

The car-body shop is located adjacent to the assembly shop. In this 150,000 ft^2 space, exterior painting, body maintenance and repairs, including sand-blasting and welding are performed.

Between these shops, vehicles are transported on special bogies that were placed under the car-body in the bogie shop, where the original bogies were removed for maintenance. These bogies are designed in a way to allow maintenance crews and robots to access units and components under the vehicle floor.

Post-inspection dynamic tests are performed on the switching tracks and vacant layup tracks. Although these tracks are not long enough to allow a train set to accelerate to and decelerate from higher speeds, it does provide a 1.5-mile long slow-speed test track within the facility to test braking and other operating components before the train set is placed back into revenue service.

4.0 PROGRAMMATIC PHASE ENGINEERING CRITERIA

Through the Program Level design process a number of alignments, station and maintenance facility locations were identified, evaluated and conceptually defined for further study in the Project Level EIR/EIS. These alignment and station options were developed based on the Authority's system-wide performance goals and objectives in a report entitled "California High-Speed Train, Program Level Environmental Impact Report/Environmental Impact Statement, Engineering Criteria, January 2004". This Report is included in the "Statewide Program Environmental Reports EIR/EIS – Miscellaneous Reports – Statewide Technical Reports".

To study the potential impacts in the Program EIR/EIS, the Engineering Criteria Report described the storage and maintenance facility requirements that were estimated to be necessary to accommodate the assumed levels of high-speed train service. (These service levels were based on the ridership demand forecast that was current at that time and used to develop an overall service, operations and maintenance concept.) The Engineering Criteria Report described conceptual facilities in terms of track and infrastructure configurations to guide the identification of potential sites for consideration in the program level analysis.

The general concept for storage and maintenance requirements described in the Engineering Criteria Report was composed of storage (mid-day and overnight), cleaning and inspection, and "light" maintenance facilities positioned at or very close to each terminal station, and a major repair facility located either near the Los Angeles station or near the center of the system (e.g. Bakersfield or Fresno). It was stated in this Report that the optimal location for the (major repair) maintenance facility depended on a multitude of variables, some of which were noted "may not be fully addressed at this program level of analysis". Consequently, it was recognized that potential sites in both general locations (Los Angeles and the Central Valley) be identified and considered in the analysis. During the evaluation process, the Regional Teams identified three potential locations for the major or "heavy" maintenance facility; two in Los Angeles and one in the Bakersfield area.Potential sites initially identified for the "terminal" layup/storage, cleaning and light maintenance facilities included: West Oakland, Los Banos, Merced, Sacramento, and San Diego. However, as the Program Level EIR/EIS process continued to develop, additional information was documented and presented in the Bay Area to Central Valley HST Final Program EIR/EIS. During the Bay Area to Central Valley EIR/EIS process the light maintenance facility at Los Banos was dropped from consideration as a viable alternative. In addition, it was stated that "the West Oakland site would not serve the Pachecho Pass alternative but should be considered as part of future Regional Rail/HST project via the Altamont corridor. Program-level evaluation considered only a site in the Bay Area at West Oakland as representative of system maintenance needs in the Bay Area. Possible Bay Area locations and sites for fleet storage/service and inspection/light maintenance facility along the preferred HST alternative between Gilroy and San Francisco will be considered as part of the project-level engineering and environmental review". Identifying potential sites for a terminal storage (light) maintenance facility for the Bay Area between Gilroy and San Francisco is currently underway as part of the project level preliminary engineering and EIR/EIS effort.The relative locations considered for these facilities options on the program level are illustrated on attached Figures 2.6-66 and 2.6-67 from the Final Program EIR/EIS. It is important to note that these facilities were described at a concept level only, and no specific preferred maintenance facility locations were selected during the Program EIR/EIS.

4.1 TERMINAL FACILITIES

For the terminal facilities two concept options were developed for the desirable configuration to provide flexibility in examining land use opportunities and alternatives:

- Option 1 – Wide Configuration: This arrangement is based upon track lengths that accommodate one 400 meter train set or two 200 meter train sets on each track. It provides the configuration which supports the conceptual service plan (from the Corridor Evaluation Study) with dimensions that are a combination of the shortest length and greatest width.
- Option 2 – Long Configuration: This arrangement is based upon track lengths that accommodate two 400 meter train sets on each track. It provides the configuration which supports the conceptual service plan (from the Corridor Evaluation Study) with dimensions that are a combination of the greatest length and smallest width.

4.2 HEAVY MAINTENANCE FACILITY

The location for the heavy maintenance facility was to be at a site such that the facility size and configuration associated with the proposed concept would accommodate the fleet size identified to support the reliable delivery of the conceptual service plan developed for the original "Corridor Evaluation Study".

Based on these criteria, the following examples of the types of areas, shops and functions were identified for consideration in the conceptual configuration of the Heavy Maintenance Facility.

The criteria with regard to the location of the Heavy Maintenance Facility (then referred to as the Main Repair and Maintenance Facility) during the Program Level EIR/EIS stated that "main repair and maintenance facilities are generally located near the main trunk of the system (Los Angeles to Merced), where the majority of trains would pass on a daily basis. Only one main repair and heavy maintenance facility would be necessary; however, three potential sites are considered in this analysis: 1) Bakersfield - could be located west of Lerdo Canal approximately halfway between 7th Standard Road and E-Lerdo Highway O.P parallel with SR-99; 2) Los Angeles; two possible sites could be located immediately south of Spring Street east of the Los Angeles River and north of Condout Street. 3) Los Angeles - The second site could be located immediately west of I-5, north of Mission Road, and northeast of Macy Street". These three sites (one near Bakersfield and two in Los Angeles) were considered in the Program EIR/EIS but no single site was identified or recommended for selection.

The conceptual configuration for the main repair and heavy maintenance facility in the Program Level EIR/EIS, included a Wheel Truing Area, a Service and Inspection Area, a Running Repair Facility, Support Shops, Material Inventory and Distribution, Component Change-out Area, Overhaul Shop, Heavy Repair Area, and Exterior Maintenance Shop. The following descriptions are examples of the types of areas, shops and functions that were considered for the conceptual configuration of the Main Repair and Maintenance Facility in the Program EIR/EIS.

Wheel Truing Area

The wheel truing facility was configured to accommodate two cars. It is utilized to restore wheel diameter parity and profile due to the stresses of track wear, drift, spalling, and wheel flat spots. The wheel truing machine was to be mounted under the floor for ease of operation. Rail cars would then be pulled over the machine to expedite turn around time. Candidate vehicles for wheel truing are typically identified during a programmed maintenance inspection.

Service and Inspection Area

The service and inspection area was configured as a two track "run-through" facility. Tracks would be equipped with observation pits and door level platforms for ease of inspection and light repair, providing access to under car, interior floor, and roof levels. Located between this area and the main maintenance area would be a "runaround" track that would allow direct access/egress to both sides of the shop. The service and inspection area was anticipated to have a sixteen car capacity on each track.

The Running Repair Area

The running repair area was configured with raised rail mounted on post structures and observation pits with depressed side floors. The posted, raised rail provides access to under car components requiring repair or replacement. Side floor and roof height platforms were also assumed in this configuration. The observation pit would be equipped with a lift device to facilitate the removal and replacement of larger, heavier component units. Platforms provided at the car body side height provide access to glass, door, and interior and exterior repair requirements. A platform at the roof level would provide access to the pantograph, resistor grids and a/c components for servicing activities as required.

Support Shops

Based on the needs of specific fleet design parameters, examples of shop areas and functions could include the following:

- Truck Shop – Equipped with a storage track and two turntables for the efficient transition of trucks requiring service and trucks ready for installation. Direct access would be provided to the Component Cleaning Area, (located on an exterior wall) to prepare the trucks for overhaul/heavy repair. This area would include eight truck hoists to facilitate efficient repair, disassembly and reassembly. The additional turntables and connecting tracks in this area would provide for the required maneuverability of truck assemblies.

Component Cleaning Area – This enclosed work area, to be located on an exterior wall, would be used to pre-clean large components such as rail vehicle trucks, air compressors and air conditioning units (condensers and evaporators) prior to disassembly and repair or shipment.

Brake Shop – This area would be used to clean, disassemble, repair, reassemble and test brake units and all brake actuators.

Air Room – This facility would be used to clean, inspect, troubleshoot, repair, rebuild, paint, and test all types of brake valves and brake system components. The work area would be divided into four separate sections; the valve cleaning room, the repair area, the valve painting area and the valve test area. The repair and test operations would be performed in enclosed, temperature-controlled rooms. Repair operations are performed in individual workstations.

Clean Room/Electronics Shop – This enclosed, temperature controlled room would be equipped to clean, troubleshoot, repair and test train set electronic components such as panels, relays, inverters, battery chargers, circuit cards and selected control units. Repair activities would generally be performed at individual workstations using specialized electronic test equipment.

HVAC Unit Repair Shop – This area would be used to repair the components, associated with air conditioning units.

Pantograph Repair Area – This area would be located on a suspended platform at the roof level of a rail car for the removal and installation of electric propulsion energy collection components.

Battery Room – This area would support the disassembly, cleaning, testing and reassembly of multi-cell battery units.

Wheel Shop – This area would support the fabrication and repair of wheel and axle sets. Machine technology resident in this shop would include a mounting press, demount press, wheel bore, and axle lathes.

Material Inventory and Distribution Area

This area would serve as the distribution point in the Heavy Maintenance Facility for the material required for maintaining, repairing, cleaning, servicing, and overall providing for the state of good repair of the high-speed rail fleet. The area would include a loading dock for highway vehicles, space for the storage of transitional components (wheel sets, air compressors, etc.), and equipment (cranes, forklifts, pallet shelving, etc.) associated with the efficient storage and distribution of rail car components and equipment.

Component Change-Out Area

This area would be configured as a four track “run-through” facility. The hoist section of this area would have the capacity to lift eight coupled rail cars on two separate tracks. Located between these tracks, would be two tracks configured for the removal and installation of rail car trucks. Car body posts would hold the rail vehicle in place while the trucks are removed and positioned on one of the four available truck turntables for efficient transition into the Truck Shop.

Overhaul Area

This area would be utilized during the life cycle maintenance program. Rail cars would undergo rebuild and major component replacement on either a time or mileage based cycle. Systems and subsystems would be removed, rebuilt and replaced.

Heavy Repairs

This area would accommodate repairs to a rail car that required it to be out of service for an extended length of time.

Exterior Maintenance Shop

This area would provide for the cosmetic and minor body damage repair, touch-up and periodic re-painting of vehicle exteriors.

5.0 GUIDELINES FOR FACILITY DESIGN AND LOCATION

This section presents guidelines associated with the design basis and location of overnight layup and inspection and maintenance facilities, and the Heavy Maintenance Facility (HMF) for the CHSTP. These guidelines were developed after extensive review of maintenance and inspection protocols in practice on the French and Japanese HST systems and detailed operational analysis for the proposed California HST project. A separate Technical Memorandum entitled "Maintenance of Way Facilities – Site Locations and Layouts", TM 5.3 is being prepared to provide guidance associated with requirements for Maintenance of Way bases on the CHSTP. In comparison to the guidelines previously provided in the engineering criteria during the CHSTP programmatic phase, many of the key maintenance and inspection protocols used on the French and Japanese HST networks that are unique to HST systems were not entirely known at that time and not fully represented in those earlier concepts. Having developed a better understanding of the proposed HST operations and the maintenance requirements, the information recently developed from the HST systems in operation in Europe and Asia, contributed to the application of refinements to these concepts and the associated facility footprints for the overnight layup, inspection and maintenance facilities and the HMF proposed for the CHSTP. To present this information, this section is organized as follows:

- Facility Types and Function: describes the levels of inspection and maintenance required for the HST, the frequency of the inspections and maintenance, and proposed location (in reference to terminal stations proximity) for the types of facilities and the HMF.
- Facility Footprint and Site Guidelines: describes the approximate size and support requirements based on the level of service required at each terminal and for the HMF.

The guidelines presented in this memorandum are consistent with the maintenance functions and requirements described during the programmatic phase but are updated with considerably more detail and additional maintenance protocols. In addition, the recommended size, location(s) and appropriate support functions for the overnight layup facilities have been modified based on current information developed for CHSTP forecast service levels and improved knowledge regarding inspection and maintenance best practices.

It is important to emphasize the importance of the HMF as an integral component of the CHSTP. Specifically, this facility is assumed to support the assembly, testing and commissioning of the train-sets as they arrive from the manufacturer prior to the start-up of Phase 1 operations and then transition to the full operation of a "typical" HST heavy maintenance workshop. During its useful life, the HMF may support the following examples of facility functions:

- Assembly
- Testing & Commissioning
- Train Storage
- Inspection
- Maintenance
- Retrofitting
- Overhaul

The relative importance of the HMF inspired a thorough review of the practices and procedures that will affect its size, location and design. As such, this section also describes key reasons that influenced the proposed size and functions of the HMF and why it is assumed for this facility to support assembly, testing and commissioning of trains as well as start-up operations.

5.1 FACILITY TYPES AND FUNCTIONS

It is proposed that the CHSTP proceed with an approach founded on the principles of the five-level maintenance and inspection protocols used by the SNCF (French National Railway) for HST operations. This approach also considers certain elements of the Japanese maintenance philosophy and, where appropriate, is modified to conform with the fundamental safety principles associated with the inspection and maintenance of rolling stock (as enforced by the Federal Railroad Administration (FRA) and as concerns the expected applicable provisions of the Code of Federal Regulations that will be included in the CHSTP Rule of Particular Applicability. This five-level classification "system" was identified as the most straightforward method for defining and applying established and proven inspection and maintenance protocols that can be easily referenced in describing the functions and services required at each CHSTP facility. As an initial step in describing what activities are proposed for each level of the CHSTP, a summary table is provided below.

Level of Inspection And Maintenance	Description
Level 1	Daily pre-trip inspections and testing. This level is carried out primarily by the operators before departure. This inspection checks the pantographs, bogies, brakes and includes restocking perishables and expendables. This level also consists of enroute and in station inspections, as well as monitoring by the automatic on-board and on-ground sensors. It includes visual inspections of the onboard train control systems and components. This level is similar to the current daily (or calendar day) inspections described in the US CFR-49.
Level 2	This level includes verifications, tests, quick replacement of components that can be replaced directly on the train set, and short-duration interventions that can usually be carried out quickly at a specialized site either near a terminal station or at a layup or maintenance facility.
Level 3	Level 3 is a standard periodic inspection regimen similar in principle to those performed every 30/45/60/90 days by FRA regulated railroads in the U.S. This inspection requires more specialized equipment and a larger maintenance facility than provided for the level 1 and 2 inspections. The functions of this inspection and maintenance level includes examining the interior fittings and all parts situated in the immediate environment of the passengers, bogie and underbody inspections and replacement of bogies if necessary. Tests, verifications and checks are performed that identify necessary adjustments or the replacement of onboard service "modules". This includes a detailed component inspection of the train control system and replacement of parts as necessary.
Level 4	This level includes component and train set overhauls, similar to the "Class A", mid-life overhauls currently performed in the U.S. This work is done exclusively at the HMF.
Level 5	Special inspections and/ or repairs associated with mechanical failures or accidents. Level 5 also includes application of major design modifications necessary to increase equipment reliability, safety and/or passenger comfort. All level 5 work occurs at the HMF.

The Levels (i.e. 1,2,3,4,5) of inspection and maintenance vary for each terminal layup/storage yard facility included in the CHSTP based upon location and train storage capacity requirements. The Levels of maintenance and inspection are performed in three facility types or categories:

- Overnight Layup Facility – Provides Level 1 and 2 maintenance and inspections
- Periodic Inspection Facility – Provides Level 1 to 3 maintenance and inspections
- HMF (Heavy Maintenance Facility) – Provides Level 1 to 5 maintenance and inspection, including overhauls and component refurbishment.

A review of SNCF best practice and a lesson learned from the implementation of the KTX HST System in Korea identified the need for the HMF to provide the capability for new fleet delivery, assembly, testing, and storage prior to start-up of revenue service. It is concluded that this facility will be located somewhere "central" to the CHSTP system and initially be connected to a "high-speed" double track segment for testing, acceptance and commissioning. The required length of this test track segment is estimated to be between 79 miles and 105 miles and is based upon current high speed train manufacturers' recommendations for testing and commissioning which includes a protocol for sustained running for ten minutes at either 360 kph or 390 kph (these are design speeds that are higher than in-service maximum speeds i.e. 350 kph).In order to operate the train at these speeds the also requires a tangent (straight) alignment for the aforementioned distances. This standard testing, acceptance and commission procedure requires the significant distances due to:

- 360 kph scenario (total 79 miles of straight, high speed double track)
    1. Acceleration to 360 kph is achieved at 23 miles
    2. Sustained running at 360 kph for ten minutes requires 37 miles
    3. Deceleration from 360 kph requires 3 miles
    4. 25% contingency for variability = 16 miles
- 390 kph scenario (total 104 miles of straight, high speed double track)
    1. Acceleration to 390 kph is achieved at 39 miles
    2. Sustained running at 390 kph requires 41 miles
    3. Deceleration from 390 kph requires 4 miles
    4. 25% contingency for variability = 21 miles

Preliminary operating plan analysis for Phase 1 (as presented in Technical Memorandum, TM 4.2 Phase 1 Service Plan dated November 20, 2008,) of the CHSTP system between Anaheim, Los Angeles and San Francisco identified the need for a Level 1,2 and 3 facility (one site) in both northern and southern California to provide daily inspection and maintenance functions, support the periodic inspection program and provide wheel re-profiling capability.

A similar operating plan analysis for the CHSTP Full System Build-Out (as presented in Technical Memorandum 4.3 , High Speed Train Service Plan – Full Build Network with Links to Sacramento and San Diego dated January 14, 2009) revealed that additional overnight layup/storage facilities to support Level 1 and Level 2 daily inspections and cleaning will be needed close to the "end points" of the branch line extensions to Sacramento and San Diego. The San Diego facility will also be required to support Level 3 inspection and maintenance protocols

In summary, it is concluded that:

- The HMF will be implemented so as to be available to support assembly, testing, acceptance and commissioning prior to start up of revenue service for Phase 1.
- The HMF will support inspection/maintenance Levels 1,2,3,4 and 5 and the desired location is on the main trunk line of the system, centrally located and positioned to connect directly to a double track test segment for purposes of acceptance testing as described above.
- The layup/storage facilities in proximity to San Francisco and Los Angeles (including capacity for Anaheim trains) will support inspection/maintenance Levels 1, 2 and 3 during Phase 1 of the CHSTP. If Anaheim is a "stand alone" separate facility (from Los Angeles) it (Anaheim) will support only Levels 1 and 2

- The layup/storage facility in proximity to San Diego in the Full System Build-Out will support inspection/maintenance Levels 1,2 and 3
- The layup/storage facility in proximity to Sacramento will support inspection/maintenance Levels 1 and 2

5.2 FACILITY FOOTPRINT AND SITE REQUIREMENTS

Based on the proposed maintenance levels presented in Section 5.1 and the results of the operations analysis conducted for the Phase 1 and Full Build-Out service plans, site guidelines related to the type, capabilities, capacities and size of each layup/storage inspection and maintenance facility have been developed and are presented in this section.

It should be noted that these are guideline-level recommendations, which the Regional Teams are encouraged to follow in designing these facilities resident on their segment of the CHSTP. The proposed configuration requirements, design components and equipment types that are anticipated to be required at each type of maintenance facility are summarized below:

Level 1, 2 & 3 Facilities

- Storage tracks (guidelines described in 5.2.1)
- Enclosed inspection tracks (guidelines described in 5.2.1)
- Exterior train washing machines
- Automated wheel inspection machine
- Wheel truing/re-profiling machine(s) (Level 3 only)
- Heavy duty interior cleaning platform(s)
- Toilet servicing system
- Inspection “pit” tracks
- Traction power inspection
- Sanding system replenishment
- Inspection/maintenance crew support facilities
- Operation crew support facilities
- Yard traffic control tower

Level 4 & 5 Facilities

Equipment and components provided for Level 1, 2 & 3 facilities, plus:

- Layup/storage tracks
- Detailed bogie inspection/maintenance facility
- Train exterior workshop facility
- Electric components inspection/maintenance facility
- Heavy machinery
- Machining tool facility

5.2.1 Facility Guidelines

This section describes the basic requirements definition criteria and guidelines on the dimensions and physical characteristics for each type of facility to be considered in the design and site identification for the layup/storage, inspection and maintenance facilities.

Layup Tracks

The configuration, capacity and length of the tracks in the layup/storage area of the facilities is based primarily on the number of train-sets identified in the operating plan that are required for morning start-up of daily service at each terminal (i.e. San Francisco, Los Angeles, Anaheim for phase 1, etc.).

Minimum length of tracks are assumed to conform with a “standard” train set (400 meters) plus 7-8 percent (additional 15 meters for 200-meter and 30 meters for 400-meter train sets, respectively) to allow for a safety “buffer” on either end of a parked train and to accommodate access between the trains for maintenance personnel.

A walkway between yard tracks is necessary to provide access to trains for operating crews and cleaning, inspection and maintenance personnel. The walkways should be of sufficient width to:

- Allow crews to access trains safely
- Allow maintenance employees to efficiently transport tools and maintenance and repair materials
- Allow cleaning/inspection/ maintenance employees to work safely on the trains
- Provide access to trains for commissary servicing (restocking food and beverages etc.)
- Allow clearance for an electric “cart” type vehicle to use the toilet servicing system

In addition, it is assumed that the following items will be considered in the facility designs:

- Adequate lighting throughout the layover section for safety and security
- Catenary positioned over a layup track will have the capability of being isolated; turned on and off to perform inspections and maintenance
- A double-sided (one track on each side) full train length platform fully equipped to perform heavy-duty interior car cleaning

Level 1, 2 and 3 Inspection and Maintenance Tracks

Tracks that are designated for programmed inspection and maintenance activities are assumed to be enclosed and protected against the elements for crews, vehicles, and components of the vehicles. Trains on these tracks will be accessible from both sides and aisle ways should be wide enough to accommodate an electric powered cart to transport tools and spare parts. If possible, inspection tracks facing the side of a building should have an aisle with extra width to accommodate special maintenance that may require larger equipment and/or vehicles (i.e. forklifts etc.)

Inspection tracks equipped with pits are assumed to be well lit for inspection and maintenance on the vehicle undercarriages and deep enough to provide sufficient vertical clearance for crews to work on a train while in a full upright, standing position. It is important that a roof platform be provided and equipped with fail-safe protection against high-voltage associated with overhead catenaries. In addition, platforms of sufficient height for train crews and cleaning crews to board and alight from the train, multiple toilet dumping connections on each equipped track, and adequate electrical utilities in the aisle and pit areas should be provided.

Level 4 and 5 Heavy Inspection and Maintenance Tracks

The fundamental facility requirements to support Level 4 and 5 inspection and maintenance activities should include:

1. An adequate number of heavy lifts capable of lifting vehicles for disassembly and inspection.
2. An adequate number of storage tracks to store train sets before, during and after the heavy maintenance process.
3. Switching tracks to allow vehicle rearrangements and switching moves within the facility.
4. Support facilities in the workshop designed to a size suitable to address the type of maintenance and repair required.
5. The test track segment previously described of between 79 miles to 105 miles in length will ultimately become part of the CHSTP system main trunk line for revenue service.

A detailed description of the specific guidelines for a Level 4 and 5 facility is provided in the following section.

5.2.2 Heavy Maintenance Facility (HMF) Guidelines

The maintenance capabilities attributable to the Level 4 and 5 (in addition to Levels 1,2,3) HMF are significantly enhanced when compared to the previously described overnight layup/storage facilities that support daily cleaning, inspection and maintenance. In addition to providing for Level 1, 2 and 3 maintenance and inspections activities, the HMF supports the requirements associated with assembly, disassembly and complete rehabilitation of the train fleet and all on-board components of the train-sets.

Service Capability and Sub-Facilities

The HMF requires “specialty” shops for specific equipment components and inspection/maintenance activities including a:

- Bogey shop: for disassembly and assembly of bogies to provide detailed inspections and rehabilitation of components, including wheel sets and bogey frames
- Vehicle assembly shop: for disassembly and assembly of the major mechanical and electrical components of the train-sets where a full range of tests and diagnostics after re-assembly are performed. This shop includes overhead cranes and heavy lifting equipment to facilitate vehicle assembly and disassembly
- Body shop: for maintenance and treatments of car bodies, including exterior painting and extensive cleaning; maintenance on certain large components that are attached to the vehicle body are also performed
- Electrical shop: for detailed maintenance and reconditioning for electrical and computer components, such as transformers, motors, compressors and diagnostic hardware
- Pneumatic/Brake shop: for maintenance and tests on the braking and shock-absorbing components on the vehicles
- Comfort shop: for maintenance on sanitary, comfort and interior components of the vehicles, such as seats, restrooms and HVAC units
- Warehouse: for efficient organization, storage and distribution of parts, modules, and components on train-sets and heavy machineries used for specialized tasks.

The total coverage area for the maintenance building may be subdivided into light and heavy maintenance operations locations. It is assumed that an adequate number of enclosed maintenance tracks with pits and high-platforms within the facility to accommodate lighter maintenance activities during testing will be provided.

Required Tracks

In addition to the "specialty" shops located in the HMF building, this facility will require storage, layup, testing and maintenance tracks. The number of storage and layup tracks is based upon the operations analysis of the Phase 1 and Full Build-Out service plans which yielded the requirement for the number of trains needed for morning start-up of revenue service in proximity to the HMF. Track capacity is also needed for the storage of train-sets during the assembly, testing, acceptance and commissioning period prior to introduction into revenue service.

Other "specialized" functions in the HMF may also require tracks to support:

- Low-speed dynamic testing
- Static testing
- Coupling, uncoupling and lifting of train cars
- External train washing/cleaning
- Switching

5.2.3 Guidelines for Physical Size of Facilities

The spatial requirements for each facility is based on the Level (1,2, 3 etc.) of cleaning, inspection and maintenance as well as the number of layup/storage tracks required to support the number of trains estimated to be assigned to each location. For the CHSTP, the storage capacity of each facility is based on the number of trains described in the Phase 1 and Full Build-Out Service Plans and is summarized in the tables below.

Layup/Storage Track Requirements – Phase 1

Location	200 m Sets	400 m Sets	Total Sets	200 m Equivalents	400 m-long Tracks
San Francisco	14	13	27	40	20
Sacramento					
Merced	5	1	6	7	4
Los Angeles	13	2	15	17	9
Anaheim/Irvine	4	13	17	30	15
San Diego					
Total	36	29	65	94	48

Layup/Storage Track Requirements – Full Build-Out Low Estimate

Location	200 m Sets	400 m Sets	Total Sets	200 m Equivalents	400 m-long Tracks
San Francisco	12	18	30	48	24
Sacramento	6	9	15	24	12
Merced					
Los Angeles	8	11	19	30	15
Anaheim/Irvine	8	9	17	26	13
San Diego	8	11	19	30	15
Total	42	58	100	158	79

Layup/Storage Track Requirements – Full Build-Out High Estimate

Location	200 m Sets	400 m Sets	Total Sets	200 m Equivalents	400 m-long Tracks
San Francisco	6	24	30	54	27
Sacramento	3	14	17	31	16
Merced	0	3	3	6	3
Los Angeles	2	16	18	34	17
Anaheim/Irvine	9	8	17	25	13
San Diego	2	20	22	42	21
Total	22	85	107	192	97

To obtain a frame of reference for the minimum “footprint” size, a comparison was made to examples of the Shinkansen and TGV facilities. This comparison revealed that, among other things, the overall width (of one of these facilities) is influenced by the need for full access walkways/cart-ways on both sides of every inspection track.

An illustration of the “preferred” width and clearances taken from the Japanese Shinkansen is:

- Maintenance building clearance between train set and structure: Width 14.4 feet X Height 25.3 feet
- Width of aisle/walkway: 5 feet

Based on this example, a layup track with an aisle-way on either side could be up to twenty feet wide. Assuming the Japanese approach, the table below shows both minimum and desirable requirements for the width of layup tracks for each facility based on the assumptions above.

Example: Minimum and Desirable Width of Parcel for CHSTP Layup/Storage – Inspection/Maintenance Facilities

	Minimum (Feet)			Desirable (Feet)		
	Phase 1	**Full Build Low**	**Full Build High**	**Phase 1**	**Full Build Low**	**Full Build High**
San Francisco	394	472	531	433	512	590
Sacramento		236	315		256	354
Merced	79		59	98		79
Los Angeles	177	295	335	197	335	374
Anaheim/Irvine	295	256	256	335	276	276
San Diego		295	413		335	453

5.2.4 Heavy Maintenance Facility (HMF) Space Estimates

The guidelines presented in this section are based on the information obtained from a review of existing HST systems, which provided a foundation for understanding the functional requirements and "footprint" of the HMF that will be needed to support the CHSTP. This information may be updated and refined as decisions that are continue to evolve the physical characteristics and train-set technology for the CHSTP.

The intent, therefore, is to present guidelines relevant to fleet storage capacity requirements, the estimated size of the facility's land parcel, and the estimated footprint needed for the maintenance building and associated support shops.

Storage Requirements

Generally, the size of the facility is influenced not only by function, but also by projected capacity, which comes from the estimated fleet size and conceptual approach for maintenance cycles. Since each HST manufacturer prescribes specific minimum maintenance requirements, the estimated inspection and maintenance capability for the HMF considers these attributes. The specific trainset technology for the CHSTP has not been selected; therefore the estimated capacity for the HMF considered a range of capability considerations that are based on a review of the existing Japanese (Shinakansen) and French (TGV) requirements.

As previously noted, an essential factor for estimating the size of the HMF is the train storage capacity needed during the assembly, testing, acceptance and commissioning stage. A number of storage tracks may have to be provided in order to store new train-sets once they have been assembled, during the commissioning period, and possibly until they are ready for revenue service. The timing of the completion of the overnight layup/ storage facilities located in proximity to the end terminals may also affect how newly commissioned trains are deployed. Consequently, three concepts have been developed to serve as illustration to consider and may provide guidance in understanding the potential train set storage requirements and configuration for the HMF.

Concept 1: Capacity to Store All Train Sets

In this concept, all train-sets are assumed to not only be assembled but also stored at the HMF until Phase 1 of the CHSTP is fully implemented. This approach is dependent on the construction and implementation of the complete Phase 1 System and requires a larger storage capacity at the HMF. To accommodate the layup capacity for all 200 meter train-sets estimated in the Phase 1 Operations & Service Plan, the footprint for the HMF would be the largest of the three concepts and require an estimated twenty- four 800-meter (or forty-eight 400-meter) storage tracks, in addition to the inspection/maintenance tracks necessary to support the activities and functions of the facility. A significant disadvantage to this approach, from a cost and efficiency standpoint, is that after Phase 1

is fully implemented and all trains begin revenue service operations, the addition storage capacity which was needed during commissioning would no longer be required.

Concept 2: Coordinated Construction of Phase 1 Infrastructure and Commissioning of Train Fleet

This concept assumes coordination of the construction and activation (for train operations) of the alignment segments between the HMF and the layup, storage and inspection/maintenance facilities at San Francisco and Los Angeles to allow train-sets to be deployed to these locations as they are assembled and commissioned. This approach considers scheduling the train assembly and commissioning as an integral activity with the construction of the Phase 1 track, signal and electric propulsion system and layup/storage facilities. This concept would not require as many storage tracks at the HMF, allowing for a smaller footprint (for the HMF). A critical factor associated with this strategy is, of course, coordination between construction of the Phase 1 system infrastructure and assembly of the train-sets to ensure train commissioning and infrastructure construction are “synchronized” to avoid a cascading schedule delay that could result in “overflow” of the layup yard capacity at the HMF.

Concept 3: Phasing in Revenue Service

The third concept considers a staged transition into Phase 1 revenue service. This approach assumes that trains are assembled and commissioned as they are needed for phased revenue service, allowing for less storage capacity (at the HMF) and a smaller footprint at the HMF. Trains required for “opening day” would be ready for introduction into revenue service and the HMF would continue assembling train-sets (after opening day) in a gradual transitional “build-up” to ultimately correspond to the proposed Phase 1 Service Plan requirements. This concept also allows for the HMF storage tracks to continue to be used for overnight layup functions and to store train sets as they are cycled through the maintenance facility once the Phase 1 level of service is fully implemented.

Capacity of Maintenance Building

In addition to the overall train storage requirements of the HMF, Level 4 and/or 5 maintenance/production capacity is an important consideration, in terms of the number of train sets per year that the facility can inspect and maintain. Maintenance capacity is dependent on the protocols adopted and, a basic understanding of these procedures was obtained by reviewing the approaches employed on existing HST systems around the world.

As an example, for the Japanese Shinkansen, full inspections and overhauls are mandated every three years. This process typically takes about ten days (or two work weeks) to complete. Assuming an estimated fleet size based on the estimate for the CHSTP, and with a cycle of three years, a minimum of forty-four trains each year would be processed through the HMF. This means that, at any one time, the HMF would have to accommodate (ongoing) an average of approximately two train-sets per every two week period.

The illustration for the French TGV system references Level 4 overhauls that are scheduled once every eight to nine years. These overhauls typically take about thirty days to complete. Assuming the estimated CHSTP fleet size, and with a cycle of eight to nine years, a minimum of fifteen train sets would be processed through the HMF annually. Considering the thirty-day duration for this activity, the HMF would have to continuously support a Level 4 overhaul on three train-sets throughout the year on an ongoing basis.

It is also important to note that some measure of additional production/maintenance capacity, i.e. one additional train-set, is typically provided beyond the planned maintenance cycles to account for unexpected requirements, such as train-sets that must remain at the facility for three to four months (at a time) to address repairs associated with accidents or other unplanned incidents.

Considering the information presented above, a HMF that supports maintenance protocols and technology based on the Japanese Shinkansen approach would have to accommodate three train sets in the heavy maintenance shop at all times. By contrast, a facility designed to support maintenance protocols and technology based on the French TGV would have to accommodate four train sets at all times.

Size of Facility

The overall footprint of the HMF will largely be based on the estimated storage capacity of the facility and the plan adopted to inspect, maintain and overhaul the fleet. The information presented in this section is based on the requirements similar to those employed by existing HST heavy maintenance facilities in Europe and Asia and are intended to serve as guidelines for planning the footprint and layout of the HMF.

Shape and Layout of Parcel

The overall footprint of the HMF should be based on the following guidelines:

- Maximize the land usage within the facility to minimize switching movements, a long and narrow parcel is typically more desirable over a short and wide parcel if possible.
- The parcel should be connected to a test track.
- Width of the parcel needs to take into account the necessary shop facilities and support and storage tracks required to perform all inspection and maintenance activities. The width of the facility will also depend on the level of storage desired prior to system start-up when train-sets are being assembled and commissioned, in addition to their frequency of operation after service is implemented.

Maintenance Building Layout

Shop buildings should be configured in a manner that maximizes land utilization but workshop functional productivity. This layout must take into account the following specialty functions:

- Entrance/Assembly shop (see 1)
- Car-body shop (see 2)
- Car-body Pretreatment & Painting Shop (see 3)
- Heavy components shops (see 4)
- Light components shops (see 5)

Included within these shops would also be a parts inventory/storage warehouse and a designated bogey shop with a wheel re-profiling machine (which would be located either in or near the heavy components shop). In addition, the bogey shop should accommodate bogies that may be undergoing repair and inspection for additional train-sets not yet assigned for their cycle in the heavy maintenance facility, but were “changed out” in one of the two periodic inspection facilities and shipped to the HMF for overhaul.

International Heavy Maintenance Facility Dimensions (Examples)

The tables below present the average size for each shop estimated to support a HST fleet using statistics obtained for French (Korean), and Japanese maintenance facilities. It should be noted that the sizes of the assembly and bogey shops (Japan) and the primary vehicle overhaul area (France, Korea) were adjusted to estimate a fleet size of similar to the number of train-sets estimated for the CHSTP.

Table 5.2.4.1: Required Size of Each Shop in Heavy Maintenance Facility Based on French TGV (Standard Used For Korean KTX)

Shop	Sub shop	Size (sq.ft.)	Total Size (sq.ft.)	Total Size (acre)
Bogie shop	Dummy bogie storage area	5,400	**69,000**	**1.58**
	Bogie storage area	5,400		
	Bogie Dis/Assembly Shop	29,100		
	Bogie repair Shop	29,100		
Carbody Pretreatment & Painting Shop	Steel structure repairing shop	9,700	**39,000**	**0.9**
	Washing, brushing, air blowing shop	3,300		
	Blasting shop	3,300		
	Soft Grinding/Putty/Sticky/Masking Shop	9,700		
	Carbody painting shop	6,500		
	Carbody drying shop	6,500		
Heavy electric shop	Main Transformer Shop	4,900	**34,100**	**0.78**
	Power Block Shop	9,700		
	Pantograph and roof apparatus	4,900		
	Aux. Motor Shop	4,900		
	Traction Motor Shop	9,700		
Heavy mecanical shop	Gangway Ring Shop (articulation TGV only)	9,700	**34,100**	**0.78**
	Coupler/Buffer Shop	4,900		
	Motor Reduction Unit and Transmission	9,700		
	Air Spring Shop	4,900		
	Oil Damper Shop	4,900		
Pneumatic shop	Brake Unit Shop	4,900	**34,100**	**0.78**
	Air Compressor Shop	9,700		
	Brake Panel /Dryer Shop	4,900		
	Door Shop	14,600		
Comfort shop	Sanitary parts Shop	4,900	**80,900**	**1.86**
	Interior Fittings Shop	32,300		
	Seat Shop	29,100		
	Polyester and carpentry Shop	14,600		
Wheelset Shop	Wheelset storage area	15,100	**66,300**	**1.52**
	Wheelset Dis/Assembly Shop	48,500		
	Bearing laboratory shop	2,700		
Air conditionning Shop		9,700	**9,700**	**0.22**
Cable/wire Shop		1,100	**1,100**	**0.03**
Battery Shop		2,200	**2,200**	**0.05**
Electric/Electronics Shop		7,600	**7,600**	**0.17**
Unitary Test Area (simulator)		14,600	**14,600**	**0.34**
Common Parts Cleaning shop		6,500	**6,500**	**0.15**
Common Parts painting shop		6,500	**6,500**	**0.15**
Automatic Warehouse		21,600	**21,600**	**0.5**
Subtotal			***427,300***	***9.81***
Primary Vehicle Overhaul Area			**203,525**	**4.67**
Total			**630,825**	**14.48**

Table: 5.4.2.2 Required Size of Each Shop In Heavy Maintenance Facility Based on Japanese Shinkansen Standard

Shop	Sub shop	Total Size (sq. ft.)	Total Size (acre)
Bogie Shop	Dummy bogie storage area	768,900	17.65
	Bogie storage area		
	Bogie Dis/Assembly Shop		
	Bogie repair Shop		
	Wheelset storage area		
	Wheelset Dis/Assembly Shop		
	Bearing laboratory shop		
	Brake Unit Shop		
	Brake Panel /Dryer Shop		
	Aux. Motor Shop		
	Traction Motor Shop		
	Motor Reduction Unit and Transmission		
	Air Spring Shop		
	Bogie Test Area		
Assembly Shop	Oil Damper Shop	390,000	8.95
	Sanitary parts Shop		
	Interior Fittings Shop		
	Seat Shop		
	Polyester and carpentry Shop		
	Air Compressor Shop		
	Door Shop		
	Main Transformer Shop		
	Power Block Shop		
	Pantograph and roof apparatus		
	Air conditioning Shop		
	Cable/wire Shop		
	Battery Shop		
	Electric/Electronics Shop		
	Body Test Area		
Body Shop	Steel structure repairing shop	210,500	4.84
	Washing, brushing, air blowing shop		
	Blasting shop		
	Soft Grinding/Putty/Sticky/Masking Shop		
	Carbody painting shop		
	Carbody drying shop		
	Coupler/Buffer Shop		
Total		1,369,400	31.44

The difference in size between the two maintenance building footprints and the function of each building are a result of the different technology requirements and associated maintenance cycles.

The Japanese system is based on an Electric Multiple Unit (EMU) technology where most individual cars within the train set have powered traction motors. The French system includes conventional locomotives and coaches as well as EMU articulated coach train set configurations. The size of shops supporting bogey maintenance and vehicle assembly for the Shinkansen system are typically larger than that for the TGV system since, among other factors, the Shinkansen train-sets are typically longer (therefore more bogies) and have a more frequent maintenance cycle requirement.

The French maintenance concept is based on the modular design of the train and is thus planned to conform to the "rules" and requirements specific to each of the component parts (each component has its own maintenance cycle). The Japanese maintenance concept applies systematic maintenance cycles as a function of the entire train, where a function includes a multitude of components.

Using the information presented in this technical memorandum, it is estimated that the HMF support building for the CHSTP could require a footprint of 14.5 to 19.3 acres (or 631,000 to 840,000 ft^2). The ranges presented in this assessment will be refined as determinations are made regarding the maintenance protocols, specific train-set technology and implementation plan for service activation.

5.2.5 Guidelines for Facility Locations

The location of the facilities is a significant factor for maximizing safety, Levels of (maintenance) service, and operation and maintenance (O&M) costs. It is preferred that layup/storage, inspection/maintenance facilities are located adjacent to terminal stations to minimize the volume of deadhead moves and associated added train miles, which adversely affect operational efficiency and operating. The following guidelines are provided for locating the maintenance facilities:

- Facilities serving layup/storage functions for morning start-up of revenue services should be located as close as possible to the terminal station (Sacramento, San Francisco, Los Angeles, Anaheim/Irvine, and San Diego) to minimize the distance of deadhead train movements.
- Approach from terminal stations to the layup/storage facilities should be in a manner that does not create conflicting train movements between "deadhead" trains and trains in revenue service.
- For the HMF, being central is important. Merced-Bakersfield is the "Central Part" of the system, is part of the trunk line (Anaheim-SF), and has the ability to include the high-speed test track (no other part of the system meets these criteria).

In summary, it is desirable for the CHSTP layup/storage, inspection and maintenance facilities to be located near the terminal stations in a configuration designed to avoid potential dispatching conflicts between deadhead train movements and revenue trains and the HMF should be central to the system.

5.2.6 California High Speed Train Yard and Maintenance Facility Footprint Guidelines

Utilizing the information provided in this document and referring to the "Technical Memorandum – High-Speed Train Service Plan – Full Build Network with Links to Sacramento and San Diego", and the Operations and Service Plan for Phase 1, conceptual configurations have been developed to provide a basis for describing the "footprints" for the major terminal yard/shop sites and the HMF. These concepts emerged from an examination of the CHSTP full-build network requirements to associated with estimated facility needs based upon train-set assignments (for layup/storage, inspection/maintenance) to the six major terminals. Maintenance concepts were reviewed, identifying a fundamental approach for inspection, maintenance and repair founded on existing HST operations in Europe and Asia. These attributes were considered in identifying the space parameters needed to support the primary inspection and maintenance functions for the CHSTP. Ancillary requirements to the primary functions were also considered, such as space requirements for personnel and material, and cleaning and testing activities.

As previously described, the examination of existing high speed train inspection and maintenance best practices has been applied in the development of a conceptual description of the facilities that may be required for the CHSTP. These concepts have been prepared locating maintenance facilities in the following CHSTP sections: Los Angeles; San Francisco; San Diego; Anaheim; Sacramento; Los Angeles/Anaheim; Central Valley (Heavy Maintenance Shop). The following Table (5.2.6.1) presents a summary of the characteristics of these concepts.

Table 5.2.6.1 Terminal Lay-up and Maintenance Facility Features

FACILITY LOCATIONS	ACREAGE	WIDTH	STORAGE TRACKS	SHOP TRACKS	HEAVY CLEANING TRACKS	OTHER TRACKS
Central Valley (HMF)	111 acres	1182 ft.	9	19	2	6
Los Angeles	58 acres	834 ft.	17	8	2	4
San Francisco	84 acres	1081 ft.	27	8	2	4
San Diego	65 acres	917 ft.	21	8	2	4
Sacramento	33 acres	428 ft.	17	0	0	1
Anaheim	30 acres	350 ft.	13	0	0	1
LA/Anaheim	79 acres	1109 ft.	30	8	2	4

In addition, a conceptual schematic illustrating the layout and dimensions for each of these facilities is provided in Appendix A, drawing numbers 5.1A through 5.1G.

5.2.7 RIGHT OF WAY MAINTENANCE

Adequate space will be required to “park” on-track right of way maintenance equipment, store maintenance of way material inventory and replacement parts, and support a “headquarters” and staging area for HST System “sub-division” maintenance personnel. The locations that support an effective Maintenance of Way program strategy are envisioned to be located within close proximity to Gilroy, Merced, Visalia, Bakersfield, and Palmdale for Phase I, with Stockton, City of Industry and Temecula added later for the Full System Build-Out. The selection of right of way maintenance facilities will be based on servicing a track distance of 75 miles in each direction from the maintenance site for a total coverage of 150 miles. This is to accommodate the time for equipment traveling at 60 mph to reach locations along the alignment needing maintenance during the five hour non-revenue period.

The site for each MOWF must be located immediately adjacent to the main line trunk of the HST System and be connected to the main line with a standard turnout. Also required is effective connectivity to the highway road network and access to utilities including water, gas, electricity, sewer and communications.

Based on a conceptual rendering of a “typical” MOWF as depicted in the attached schematics entitled “MOWF Concept Plan”, Alternative A (wide configuration) TM 5.2-A and Alternative B (narrow configuration) TM 5.2-B the size of these facilities would require a land parcel “footprint” of between approximately 17 to 18 acres each, inclusive of roadways and parking.

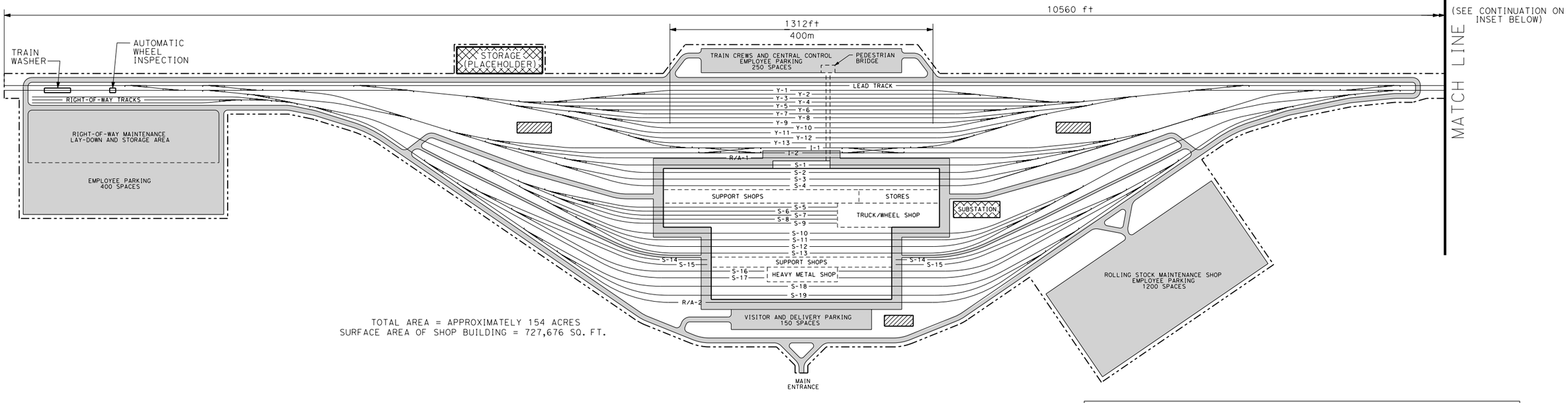

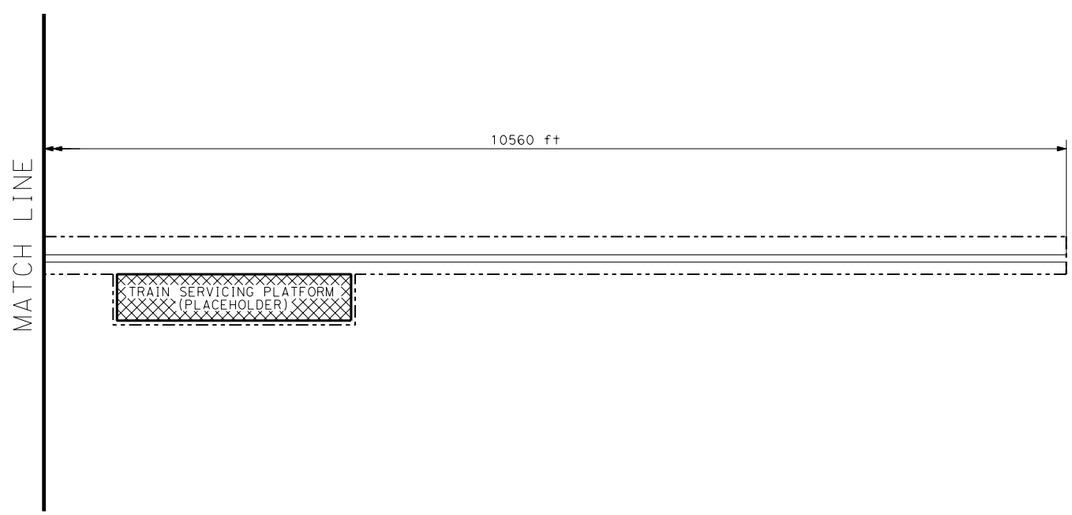

LEGEND:

- PLACEHOLDERS
- PARKING AND ROADWAYS
- EMERGENCY GENERATOR
- FENCE LINE

NOTE: CENTRAL CONTROL AND PERSONNEL WELFARE FACILITIES (BATHROOM, LOCKER ROOMS, LUCH BREAK ROOMS) ON UPPER FLOOR OF SHOP FOOTPRINT ALONG WITH ADDITIONAL BACKSHOPS.

YARD TRACKS				SHOP TRACKS	
TRACKS	FUNCTION	TRK CENTERS		TRACKS	FUNCTION
Y-1	SPARE RATIO - FLEET	19.5 FT		S-1	WHEEL TRUE
Y-2				S-2	LEVEL III - PERIODIC INSPECTION AND SERVICE; RUNNING REPAIR
Y-3				S-3	
Y-4				S-4	
Y-5	DAILY PRE-TRIP R/R LEVEL I AND II			S-5	COMPONENT CHANGE-OUTS
Y-6				S-6	
Y-7	SWITCHING TRACKS			S-7	
Y-8				S-8	
Y-9	MANIPULATION - LAYUP - DAILY			S-9	
Y-10				S-10	LEVEL IV - OVERHAUL
Y-11				S-11	
Y-12	EIC ON PLATFORM			S-12	
Y-13				S-13	
I-1	INTERCHANGE	25 FT		S-14	HEAVY REPAIR STORAGE
I-2				S-15	
R/A-1	RUNAROUND			S-16	LEVEL V - HEAVY REPAIR
R/A-2	RUNAROUND			S-17	
				S-18	PAINT
				S-19	

REV	DATE	BY	CHK	APP	DESCRIPTION
1	06/26/09	BJ	JTS	PM	ADD: MOW SPACE, PARKING, ROADWAY, SUPPORT BLDGS

DESIGNED BY J. SHEEHAN
DRAWN BY N. DELEON
CHECKED BY P. MOSIER
IN CHARGE P. MOSIER
DATE 05-29-09

CALIFORNIA HIGH-SPEED RAIL AUTHORITY
FLY CALIFORNIA
Without ever leaving the ground.

CALIFORNIA HIGH-SPEED TRAIN PROJECT

HEAVY MAINTENANCE FACILITY (HMF)
CONCEPT PLAN

CONTRACT NO. 13259
DRAWING NO. TM 5.1-A
SCALE NO SCALE
SHEET NO.

7/28/2009 11:32:17 AM T:\13259B Calif High Speed Rail\CADD\Directive Drawings\5.1 - Rolling Stock Maintenence Plan and Facility Requirements\5.1-A.dgn
antonio

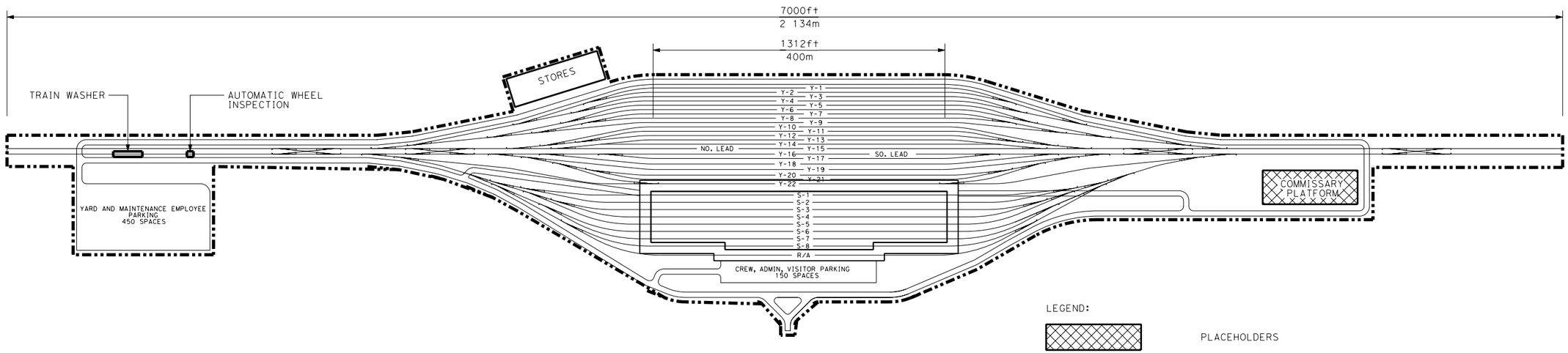

LEGEND:

PLACEHOLDERS

TOTAL AREA = 83 ACRES (34 HECTARES)
SHOP FLOOR AREA = 328,083 SQ. FT.

NOTE: ADMIN., OPS, WELFARE SHOULD BE CONSIDERED ON UPPER FLOOR OF SHOP FOOTPRINT ALONG WITH ADDITIONAL BACKSHOPS.

YARD TRACKS			
TRACKS	FUNCTION		TRK CENTERS
Y-1	DAILY PRE-TRIP RUNNING REPAIR LEVEL I AND II MANIPULATION LAYUP DAILY CLEANING TOILET SERVICING	STORAGE INSPECTION	19.5 FT
Y-2			
Y-3			
Y-4			
Y-5			
Y-6			
Y-7			
Y-8			
Y-9			
Y-10			
Y-11			
Y-12			
Y-13			
Y-14			
Y-15	NORTH AND SOUTH LEADS SWITCHING TRACKS		25 FT
Y-16			
Y-17	DAILY PRE-TRIP RUNNING REPAIR LEVEL I AND II MANIPULATION LAYUP DAILY CLEANING TOILET SERVICING	STORAGE INSPECTION	19.5 FT
Y-18			
Y-19			
Y-20	EXTRAORDINARY INTERIOR CLEANING		25 FT
Y-21			
Y-22	INTERCHANGE		

SHOP TRACKS	
TRACKS	FUNCTION
S-1	PIT TRACKS - LEVEL III PERIODIC INSPECTIONS
S-2	
S-3	
S-4	
S-5	
S-6	FLAT TRACK - LIFT & TRUCK/BOGEY HOLD / RT RELEASE CHANGE OUT / MEDIUM REPAIR
S-7	
S-8	WHEEL TRUE
R/A	RUNAROUND

REV	DATE	BY	CHK	APP	DESCRIPTION
1	07/22/09	BJ	JTS	PM	ADD: MOW SPACE, PARKING, ROADWAY, SUPPORT BLDGS

DESIGNED BY J. SHEEHAN
DRAWN BY N. DELEON
CHECKED BY P. MOSIER
IN CHARGE P. MOSIER
DATE 05-29-09

CALIFORNIA HIGH-SPEED RAIL AUTHORITY
FLY CALIFORNIA
Without ever leaving the ground.

CALIFORNIA HIGH-SPEED TRAIN PROJECT

LOS ANGELES
STORAGE YARD AND MAINTENANCE FACILITY
CONCEPT PLAN

CONTRACT NO. 13259
DRAWING NO. TM 5.1-B
SCALE NO SCALE
SHEET NO.

7/28/2009 11:05:28 AM T:\13259B Calif High Speed Rail\CADD\Directive Drawings\5.1 - Rolling Stock Maintenence Plan and Facility Requirements\5.1-B.dgn
antonio

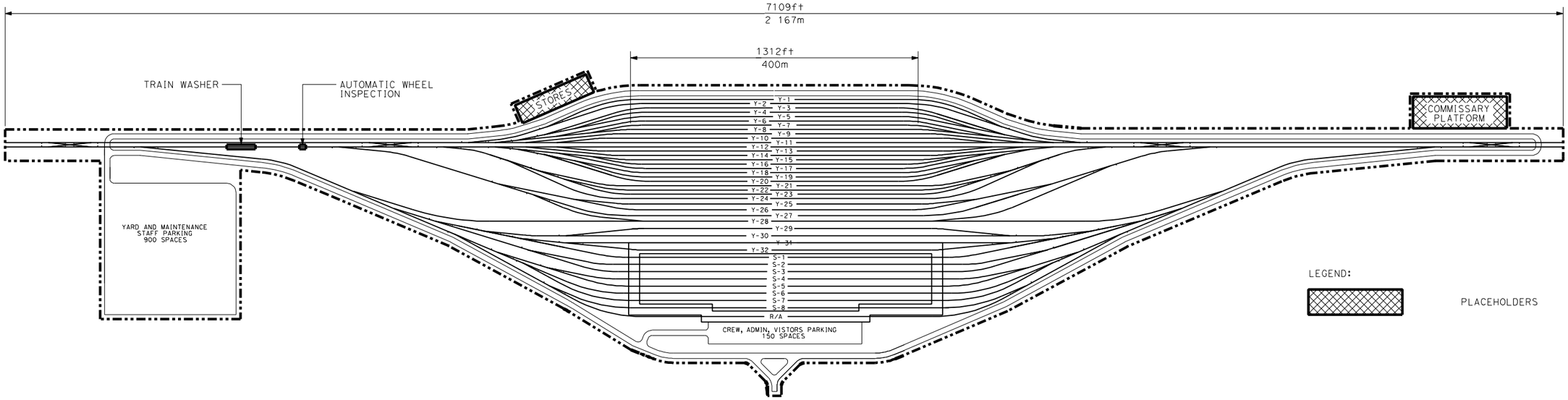

TOTAL AREA = 108 ACRES (44 HECTARES)
SHOP FLOOR AREA = 328,083 SQ. FT.

NOTE: ADMIN., OPS, WELFARE SHOULD BE CONSIDERED ON UPPER FLOOR OF SHOP FOOTPRINT ALONG WITH ADDITIONAL BACKSHOPS.

YARD TRACKS			
TRACKS	FUNCTION		TRK CENTERS
Y-1	DAILY PRE-TRIP RUNNING REPAIR LEVEL I AND II MANIPULATION LAYUP	STORAGE INSPECTION DAILY CLEANING TOILET SERVICING	19.5 FT
Y-2			
Y-3			
Y-4			
Y-5			
Y-6			
Y-7			
Y-8			
Y-9			
Y-10			
Y-11			
Y-12			
Y-13			
Y-14			
Y-15			
Y-16			
Y-17			
Y-18			
Y-19			
Y-20			
Y-21			
Y-22			
Y-23			
Y-24			
Y-25			
Y-26			
Y-27			
Y-28	SWITCHING TRACKS	FOR YARD SWITCHING	25 FT
Y-29			
Y-30	EXTRAORDINARY INTERIOR CLEANING	SPECIAL CLEANING PLATFORM	
Y-31			
Y-32	INTERCHANGE	EQUIPMENT, DEL. AND RELEASE	

SHOP TRACKS	
TRACKS	FUNCTION
S-1	PIT TRACKS - LEVEL III PERIODIC INSPECTIONS
S-2	
S-3	
S-4	
S-5	
S-6	FLAT TRACK - LIFT & TRUCK/BOGEY CHANGE OUT / MEDIUM REPAIR
S-7	
S-8	WHEEL TRUE
R/A	RUNAROUND TRACK

REV	DATE	BY	CHK	APP	DESCRIPTION
1	07/22/09	BJ	JTS	PM	ADD: MOW SPACE, PARKING, ROADWAY, SUPPORT BLDGS

DESIGNED BY J. SHEEHAN
DRAWN BY N. DELEON
CHECKED BY P. MOSIER
IN CHARGE P. MOSIER
DATE 05-29-09

CALIFORNIA HIGH-SPEED RAIL AUTHORITY
FLY CALIFORNIA
Without ever leaving the ground.

CALIFORNIA HIGH-SPEED TRAIN PROJECT

SAN FRANCISCO
STORAGE YARD AND MAINTENANCE FACILITY
CONCEPT PLAN

CONTRACT NO. 13259
DRAWING NO. TM 5.1-C
SCALE NO SCALE
SHEET NO.

7/28/2009 11:00:45 AM T:\13259B Calif High Speed Rail\CADD\Directive Drawings\5.1 - Rolling Stock Maintenence Plan and Facility Requirements\5.1-C.dgn
Grajo

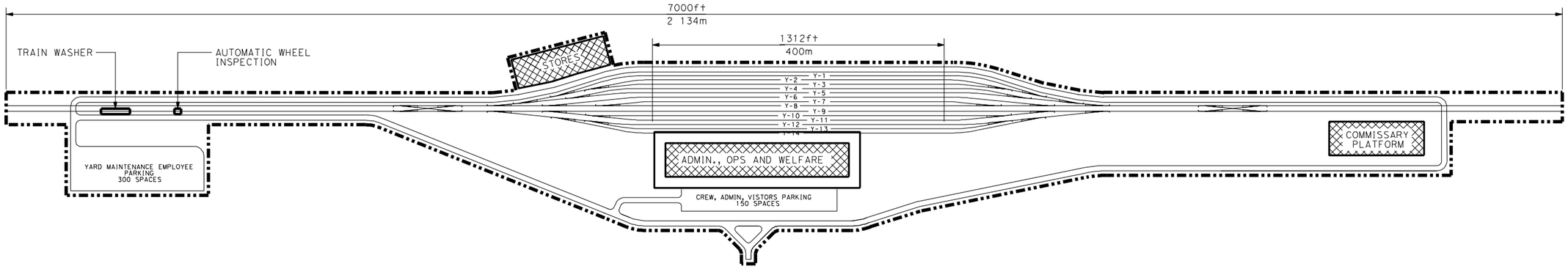

TOTAL AREA = 74 ACRES (30 HECTARES)

LEGEND:

PLACEHOLDERS

YARD TRACKS			
TRACKS	FUNCTION		TRK CENTERS
Y-1	DAILY PRE-TRIP LEVEL I AND II; RUNNING REPAIR MANIPULATION LAYUP	STORAGE INSPECTION	19.5 FT
Y-2			
Y-3			
Y-4			
Y-5			
Y-6			
Y-7			
Y-8	SWITCHING TRACK		
Y-9	DAILY PRE-TRIP LEVEL I AND II; RUNNING REPAIR MANIPULATION LAYUP	STORAGE INSPECTION	19.5 FT
Y-10			
Y-11			
Y-12			
Y-13			
Y-14			

REV	DATE	BY	CHK	APP	DESCRIPTION
1	07/22/09	BJ	JTS	PM	ADD: MOW SPACE, PARKING, ROADWAY, SUPPORT BLDGS

DESIGNED BY J. SHEEHAN
DRAWN BY N. DELEON
CHECKED BY P. MOSIER
IN CHARGE P. MOSIER
DATE 05-29-09

CALIFORNIA HIGH-SPEED RAIL AUTHORITY
FLY CALIFORNIA
Without ever leaving the ground.

CALIFORNIA HIGH-SPEED TRAIN PROJECT

ANAHEIM
STORAGE YARD AND MAINTENANCE FACILITY
CONCEPT PLAN

CONTRACT NO. 13259
DRAWING NO. TM 5.1-D
SCALE NO SCALE
SHEET NO.

7/28/2009 11:02:35 AM T:\13259B Calif High Speed Rail\CADD\Directive Drawings\5.1 - Rolling Stock Maintenence Plan and Facility Requirements\5.1-D.dgn
Grajo

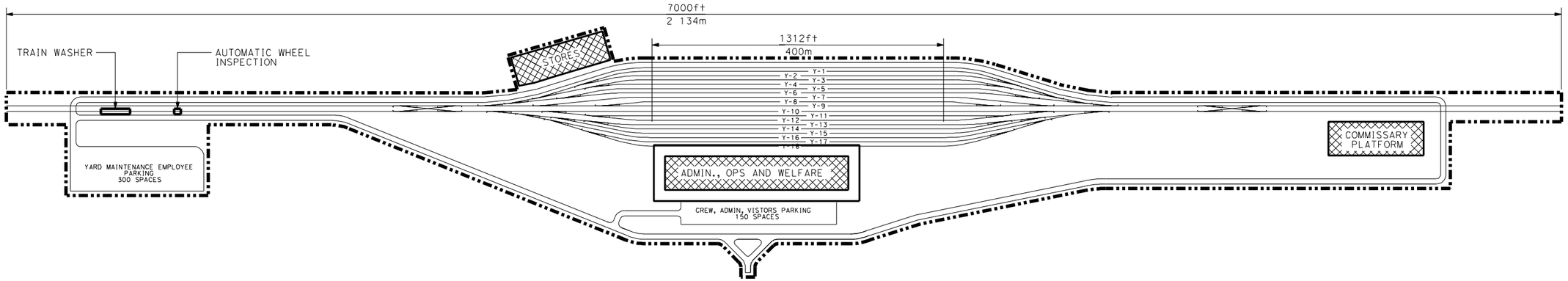

TOTAL AREA = 76 ACRES (31 HECTARES)

LEGEND:

PLACEHOLDERS

YARD TRACKS			
TRACKS	FUNCTION		TRK CENTERS
Y-1	DAILY PRE-TRIP LEVEL I AND II; RUNNING REPAIR MANIPULATION LAYUP	STORAGE INSPECTION	19.5 FT
Y-2			
Y-3			
Y-4			
Y-5			
Y-6			
Y-7			
Y-8			
Y-9			
Y-10	SWITCHING TRACK		
Y-11	DAILY PRE-TRIP LEVEL I AND II; RUNNING REPAIR MANIPULATION LAYUP	STORAGE INSPECTION	19.5 FT
Y-12			
Y-13			
Y-14			
Y-15			
Y-16			
Y-17			
Y-18			

REV	DATE	BY	CHK	APP	DESCRIPTION
1	07/22/09	BJ	JTS	PM	ADD: MOW SPACE, PARKING, ROADWAY, SUPPORT BLDGS

DESIGNED BY J. SHEEHAN
DRAWN BY N. DELEON
CHECKED BY P. MOSIER
IN CHARGE P. MOSIER
DATE 05-29-09

CALIFORNIA HIGH-SPEED RAIL AUTHORITY
FLY CALIFORNIA
Without ever leaving the ground.

CALIFORNIA HIGH-SPEED TRAIN PROJECT

SACRAMENTO
STORAGE YARD AND MAINTENANCE FACILITY
CONCEPT PLAN

CONTRACT NO. 13259
DRAWING NO. TM 5.1-E
SCALE NO SCALE
SHEET NO.

7/28/2009 11:03:47 AM T:\13259B Calif High Speed Rail\CADD\Directive Drawings\5.1 - Rolling Stock Maintenence Plan and Facility Requirements\5.1-E.dgn
Grajo

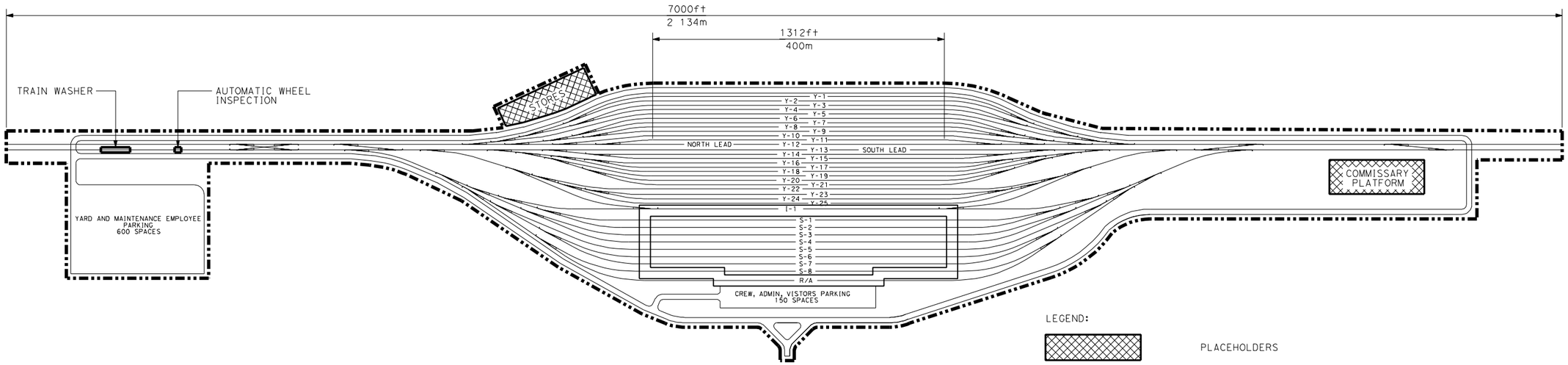

TOTAL AREA = 93 ACRES (37 HECTARES)
SHOP FLOOR AREA = 328,083 SQ. FT.

LEGEND:

PLACEHOLDERS

NOTE: ADMIN., OPS, WELFARE SHOULD BE CONSIDERED ON UPPER FLOOR OF SHOP FOOTPRINT ALONG WITH ADDITIONAL BACKSHOPS.

YARD TRACKS

TRACKS	FUNCTION		TRK CENTERS	TRACKS	FUNCTION
Y-1	DAILY PRE-TRIP LEVEL I AND II; RUNNING REPAIR MANIPULATION LAYUP DAILY CLEANING TOILET SERVICING	STORAGE INSPECTION	19.5 FT	S-1	PIT TRACKS - LEVEL III PERIODIC INSPECTIONS
Y-2				S-2	
Y-3				S-3	
Y-4				S-4	
Y-5				S-5	
Y-6				S-6	FLAT TRACK - LIFT & TRUCK/BOGEY HOLD / RT RELEASE CHANGE OUT / MEDIUM REPAIR
Y-7					
Y-8				S-7	
Y-9				S-8	WHEEL TRUE
Y-10				R/A	RUNAROUND
Y-11					
Y-12	NORTH AND SOUTH LEADS SWITCHING TRACK		25 FT		
Y-13					
Y-14	DAILY PRE-TRIP LEVEL I AND II; RUNNING REPAIR MANIPULATION LAYUP DAILY CLEANING TOILET SERVICING	STORAGE INSPECTION	19.5 FT		
Y-15					
Y-16					
Y-17					
Y-18					
Y-19					
Y-20					
Y-21					
Y-22					
Y-23					
Y-24	EXTRAORDINARY INTERIOR CLEANING		25 FT		
Y-25					
I-1	INTERCHANGE				

REV	DATE	BY	CHK	APP	DESCRIPTION
1	07/22/09	BJ	JTS	PM	ADD: MOW SPACE, PARKING, ROADWAY, SUPPORT BLDGS

DESIGNED BY J. SHEEHAN
DRAWN BY N. DELEON
CHECKED BY P. MOSIER
IN CHARGE P. MOSIER
DATE 05-29-09

CALIFORNIA HIGH-SPEED RAIL AUTHORITY
FLY CALIFORNIA
Without ever leaving the ground.

CALIFORNIA HIGH-SPEED TRAIN PROJECT

SAN DIEGO
STORAGE YARD AND MAINTENANCE FACILITY
CONCEPT PLAN

CONTRACT NO. 13259
DRAWING NO. TM 5.1-F
SCALE NO SCALE
SHEET NO.

7/28/2009 11:04:47 AM T:\13259B Calif High Speed Rail\CADD\Directive Drawings\5.1 - Rolling Stock Maintenence Plan and Facility Requirements\5.1-F.dgn
Grojo

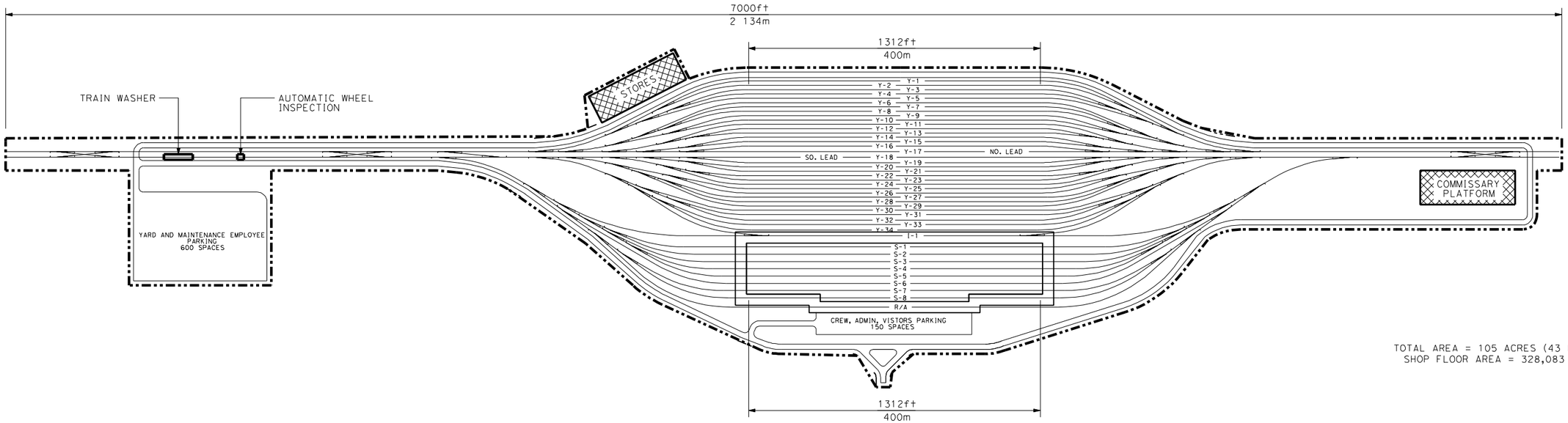

TOTAL AREA = 105 ACRES (43 HECTARES)
SHOP FLOOR AREA = 328,083 SQ. FT.

LEGEND:

PLACEHOLDERS

NOTE: ADMIN., OPS, WELFARE SHOULD BE CONSIDERED ON UPPER FLOOR OF SHOP FOOTPRINT ALONG WITH ADDITIONAL BACKSHOPS.

YARD TRACKS			
TRACKS	FUNCTION		TRK CENTERS
Y-1	DAILY PRE-TRIP RUNNING REPAIR LEVEL I AND II MANIPULATION LAYUP DAILY CLEANING TOILET SERVICING	STORAGE INSPECTION	19.5 FT
Y-2			
Y-3			
Y-4			
Y-5			
Y-6			
Y-7			
Y-8			
Y-9			
Y-10			
Y-11			
Y-12			
Y-13			
Y-14			
Y-15			
Y-16			
Y-17	NORTH AND SOUTH LEADS SWITCHING TRACKS		25 FT
Y-18			
Y-19	DAILY PRE-TRIP RUNNING REPAIR LEVEL I AND II MANIPULATION LAYUP DAILY CLEANING TOILET SERVICING	STORAGE INSPECTION	19.5 FT
Y-20			
Y-21			
Y-22			
Y-23			
Y-24			
Y-25			
Y-26			
Y-27			
Y-28			
Y-29			
Y-30			
Y-31			
Y-32			
Y-33	EXTRAORDINARY INTERIOR CLEANING		25 FT
Y-34			
I-1	INTERCHANGE		

SHOP TRACKS	
TRACKS	FUNCTION
S-1	PIT TRACKS - LEVEL III PERIODIC INSPECTIONS
S-2	
S-3	
S-4	
S-5	
S-6	FLAT TRACK - LIFT & TRUCK/BOGEY HOLD / RT RELEASE CHANGE OUT / MEDIUM REPAIR
S-7	
S-8	WHEEL TRUE
R/A	RUNAROUND

REV	DATE	BY	CHK	APP	DESCRIPTION
1	07/22/09	BJ	JTS	PM	ADD: MOW SPACE, PARKING, ROADWAY, SUPPORT BLDGS

DESIGNED BY J. SHEEHAN
DRAWN BY N. DELEON
CHECKED BY P. MOSIER
IN CHARGE P. MOSIER
DATE 05-29-09

CALIFORNIA HIGH-SPEED RAIL AUTHORITY
FLY CALIFORNIA
Without ever leaving the ground.

CALIFORNIA HIGH-SPEED TRAIN PROJECT

LOS ANGELES / ANAHEIM
STORAGE YARD AND MAINTENANCE FACILITY
CONCEPT PLAN

CONTRACT NO. 13259
DRAWING NO. TM 5.1-G
SCALE NO SCALE
SHEET NO.

7/28/2009 11:05:43 AM T:\13259B Calif High Speed Rail\CADD\Directive Drawings\5.1 - Rolling Stock Maintenence Plan and Facility Requirements\5.1-G.dgn
Grajo