CALIFORNIA HIGH-SPEED TRAIN

Project Environmental Impact Report/Environmental Impact Statement

FINAL

Merced to Fresno Section Project EIR/EIS

Volume III:

Section E2 – Alignment Plans

Hybrid Alternative with Ave 24 Wye

April 2012

CALIFORNIA High-Speed Rail Authority

U.S. Department of Transportation
Federal Railroad Administration

VOLUME 1 - GENERAL & TRACK ALIGNMENT

DRAWING No.	REV No.	DRAWING DESCRIPTION
		VOLUME 1A - GENERAL
GE-D0001		PACKAGE 1A - TITLE SHEET
GE-A0001		PACKAGE 1A - GENERAL - INDEX OF DRAWINGS
TT-B0001		PACKAGE 1A - GENERAL - NOTES
VS-C0001		PACKAGE 1A - GENERAL - SURVEY CONTROL DATA - SHEET 1 OF 4
VS-C0002		PACKAGE 1A - GENERAL - SURVEY CONTROL DATA - SHEET 2 OF 4
VS-C0003		PACKAGE 1A - GENERAL - SURVEY CONTROL DATA - SHEET 3 OF 4
VS-C0004		PACKAGE 1A - GENERAL - SURVEY CONTROL DATA - SHEET 4 OF 4
		VOLUME 1B - TRACK ALIGNMENT
TT-B0001		PACKAGE 1A - TRACK GUIDEWAY - KEY MAP
TT-D3001		PACKAGE 1A - TRACK GUIDEWAY - TYPICAL SECTIONS
TT-D3002		PACKAGE 1A - TRACK GUIDEWAY - TYPICAL SECTIONS
TT-D3003		PACKAGE 1A - TRACK GUIDEWAY - TYPICAL SECTIONS
TT-D3004		PACKAGE 1A - TRACK GUIDEWAY - TYPICAL SECTIONS
TT-D3005		PACKAGE 1A - TRACK GUIDEWAY - TYPICAL SECTIONS
TT-D3006		PACKAGE 1A - TRACK GUIDEWAY - TYPICAL SECTIONS
TT-D3007		PACKAGE 1A - TRACK GUIDEWAY - TYPICAL SECTIONS
TT-D3008		PACKAGE 1A - TRACK GUIDEWAY - TYPICAL SECTIONS
TT-D3009		PACKAGE 1A - TRACK GUIDEWAY - TYPICAL SECTIONS
CB3010		FRESNO SUBSECTION - ALIGNMET F1 - CROSS SECTIONS
CB3011		FRESNO SUBSECTION - ALIGNMET F1 - CROSS SECTIONS
TT-D0001		PACKAGE 1A - TRACK GUIDEWAY - HORIZONTAL ALIGNMENT DATA
TT-D1000		PACKAGE 1A - TRACK GUIDEWAY - PLAN AND PROFILE - STA. 10535+00 TO 10554+00
TT-D1001		PACKAGE 1A - TRACK GUIDEWAY - PLAN AND PROFILE - STA. 10554+00 TO 10582+00
TT-D1002		PACKAGE 1A - TRACK GUIDEWAY - PLAN AND PROFILE - STA. 10582+00 TO 10610+00
TT-D1003		PACKAGE 1A - TRACK GUIDEWAY - PLAN AND PROFILE - STA. 10610+00 TO 10638+00
TT-D1004		PACKAGE 1A - TRACK GUIDEWAY - PLAN AND PROFILE - STA. 10638+00 TO 10666+00
TT-D1005		PACKAGE 1A - TRACK GUIDEWAY - PLAN AND PROFILE - STA. 10666+00 TO 10694+00
TT-D1006		PACKAGE 1A - TRACK GUIDEWAY - PLAN AND PROFILE - STA. 10694+00 TO 10722+00
TT-D1007		PACKAGE 1A - TRACK GUIDEWAY - PLAN AND PROFILE - STA. 10722+00 TO 10750+00
TT-D1008		PACKAGE 1A - TRACK GUIDEWAY - PLAN AND PROFILE - STA. 10750+00 TO 10778+00
TT-D1009		PACKAGE 1A - TRACK GUIDEWAY - PLAN AND PROFILE - STA. 10778+00 TO 10806+00
TT-D1010		PACKAGE 1A - TRACK GUIDEWAY - PLAN AND PROFILE - STA. 10806+00 TO 10834+00
TT-D1011		PACKAGE 1A - TRACK GUIDEWAY - PLAN AND PROFILE - STA. 10834+00 TO 10862+00
TT-D1012		PACKAGE 1A - TRACK GUIDEWAY - PLAN AND PROFILE - STA. 10862+00 TO 10890+00
TT-D1013		PACKAGE 1A - TRACK GUIDEWAY - PLAN AND PROFILE - STA. 10890+00 TO 10918+00
TT-D1014		PACKAGE 1A - TRACK GUIDEWAY - PLAN AND PROFILE - STA. 10918+00 TO 10946+00
TT-D1015		PACKAGE 1A - TRACK GUIDEWAY - PLAN AND PROFILE - STA. 10946+00 TO 10974+00
CB1657		FRESNO SUBSECTION - ALIGNMET F1 - STA. 257+24.56 TO 261+00
CB1658		FRESNO SUBSECTION - ALIGNMET F1 - STA. 261+00 TO 275+00
CB1659		FRESNO SUBSECTION - ALIGNMET F1 - STA. 275+00 TO 289+00
CB1160		FRESNO SUBSECTION - ALIGNMET F1 - STA. 289+00 TO 303+00
CB1161		FRESNO SUBSECTION - ALIGNMET F1 - STA. 303+00 TO 317+25
		TT-D0016 TO TT-D1029 NOT USED
TT-D1030		PACKAGE 1A - SJVRR SOUTH SPUR - PLAN AND PROFILE - STA. 0+00 TO STA. 8+68.74

shieldsa 2/23/2012 8:31:57 AM cahsrp-r1.tbl chsr_half_black.plt \\usscr1fp001\cadd\chsr\60022962\Task-03_Merced-Fresno\CADD\Rail\Design\SHIELDSA\CP1A DEIR UPDATED\1S-GE-A0001.dgn

REV	DATE	BY	CHK	APP	DESCRIPTION

DESIGNED BY
DRAWN BY A. SHIELDS
CHECKED BY A. BOONE
IN CHARGE A. BOONE
DATE 02/01/2012

PROPOSED PRELIMINARY DESIGN

NOT FOR CONSTRUCTION

AECOM Technical Services, Inc.
2020 L Street, Suite 300
Sacramento, CA 95811
CH2MHILL

CALIFORNIA HIGH-SPEED RAIL AUTHORITY

CALIFORNIA HIGH-SPEED TRAIN PROJECT
SIERRA SUBDIVISION
PACKAGE 1A
GENERAL
INDEX OF DRAWINGS

CONTRACT NO.
DRAWING NO. GE-A0001
SCALE NONE
SHEET NO.

GENERAL NOTES

A. GENERAL

1. IN-SCOPE AND AND NOT IN-SCOPE ITEMS ARE INDENTIFIED IN THE SCOPE OF WORK ATTACHMENT (ELEMENTS MATRIX + SCOPING TYPICAL SECTIONS)

2. REFER TO SCOPE OF WORK DOCUMENTATION IN THE PROCUREMENT PACKAGE FOR SCOPE REQUIREMENTS. FINAL DESIGN AND DIMENSIONS SHALL BE BASED ON DESIGN CRITERIA, DIRECTIVE DRAWINGS AND STANDARD DRAWING REQUIREMENTS.

B. CONTROL SURVEY AND MAPPING:

1. NAD 83 (NSRS2007), (1991.35)CALIFORNIA COORDINATE SYSTEM DATUM SHALL BE USED AS HORIZONTAL COORDINATE VALUES.

2. NAVD 88 VERTICAL DATUM SHALL TO BE USED AS VERTICAL DATUM.

3. MAPPING SHALL BE BASED ON CALIFORNIA COORDINATE SYSTEM (CCS 83) IN US CUSTOMARY UNITS.

4. NETWORK OF CONTROL SURVEY MONUMENTS WAS ESTABLISHED AT TWO MILE INTERVALS ALONG THE CHSTP ALIGNMENT. THESE CONTROL MONUMENTS SHALL BE USED IN FUTURE SURVEYS TO ENSURE THAT SURVEY ACTIVITIES ARE BASED ON THE SAME ADJUSTMENT POSITIONS AND EPOCH THAT TRANSITIONS BETWEEN ZONES OF THE CALIFORNIA COORDINATE SYSTEM ARE UNIFORM AND CORRECT.

TRACK GENERAL NOTES:

A. GENERAL TRACK NOTES:

1. THE GENERAL BASIS FOR TRACK STANDARDS AND MATERIALS SHALL BE THE AREMA MANUAL.

2. TRACK AND TRACK COMPONENTS SHALL BE DESIGNED AND FABIRICATED TO PERFORM UNDER THE PREVAILING AND EXTREME CLIMATIC AND ENVIRONMENTAL CONDITIONS OCCURING WITHIN THE GEOGRAPHIC EXTENT OF THE SYSTEM.

3. THE PROFILE IS CARRIED ON THE TOP OF LOWER RAIL THROUGH HORIZONTAL CURVES AND SPIRALS FOR THE DESIGNATED TRACK.

4. THE LENGTHS OF LINES ARE BASED ON CENTER OF TRACK ALIGNMENT.

5. UNLESS SEPARATE TRACK PROFILES ARE GIVEN, TRACK PARALLEL TO THE DESIGNATED TRACK ARE AT THE SAME TOP OF RAIL ELEVATIONS PROJECTED ON EITHER PERPENDICULAR OR RADIAL LINES FROM THE DESIGNATED TRACK CENTERLINES.

6. BALLASTED TRACKS ARE GENERALLY PREFERRED FOR YARD TRACKS. DESIGNERS SHALL FOLLOW THE REQUIREMENTS ASSOCIATED WITH CONSTRUCTION OF BALLASTED TRACK IN THE CALIFORNIA HIGH SPEED TRAIN DESIGN MANUAL.

7. DIMENSIONS SHOWN ON THE DESIGN DRAWINGS WERE DEVELOPED BY PRELIMINARY ENGINEERING AND FINAL DIMINSIONS WILL BE DETERMINED ON THE FINAL TRACK PLANS BY THE DESIGN BUILDER.

8. "ORIGINAL GROUND" SHOWN ON CROSS SECTIONS REFERS TO THE APPROXIMATE EXISTING GROUND LINE AT THE DESIGNATED CENTERLINE, BASELINE, LAYOUT LINE OR SECTION LINE.

NOTES:

1. HORIZONTAL CONTROL DATUM:

   THE HORIZONTAL GRID COORDINATES SHOWN HEREIN ARE BASED UPON THE NORTH AMERICAN DATUM OF 1983 (NAD 83), CALIFORNIA STATE PLANE COORDINATE SYSTEM, ZONE IV.

2. VERTICAL CONTROL DATUM:

   THE VERTICAL DATUM FOR THE EVEVATIONS SHOWN HEREIN ARE BASED UPON THE NORTH AMERICAN VERTICAL DATUM OF 1988 (NAVD 88).

3. PROJECTION:

   LAMBERT CONIC PROJECTION

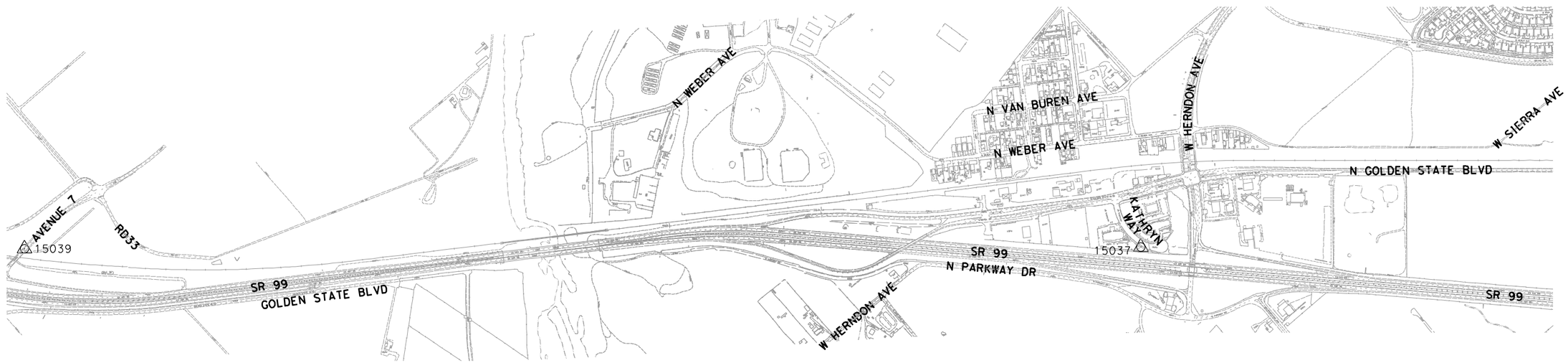

HORIZONTAL AND VERTICAL CONTROL INFORMATION

POINT #	DESCRIPTION	NORTHING	EASTING	ELEVATION
15037	PB CONTROL: S182-P 2½" BRONZE DISK IN 1" IRON PIPE IN 8" CONCRETE PIER, STAMPED "CHSRA S182P LS 4430 2010"	2187855.88	6292923.69	300.64
15039	NGS CONTROL: DG9697	2194533.009	6285098.921	318.89

500 0 500 1000

1"=500'

SCALE APPLICABLE FOR FULL SIZE ONLY

REV	DATE	BY	CHK	APP	DESCRIPTION

DESIGNED BY A. SHIELDS
DRAWN BY F. DeMARCO
CHECKED BY S. WONG
IN CHARGE A. BOONE
DATE 01/09/2012

PROPOSED PRELIMINARY DESIGN

NOT FOR CONSTRUCTION

AECOM Technical Services, Inc.
2020 L Street, Suite 300
Sacramento, CA 95811

CH2MHILL

CALIFORNIA HIGH-SPEED RAIL AUTHORITY

CALIFORNIA HIGH-SPEED TRAIN PROJECT
SIERRA SUBDIVISION
PACKAGE 1A
GENERAL
SURVEY CONTROL DATA
SHEET 1 OF 4

CONTRACT NO.
DRAWING NO. VS-C0001
SCALE AS SHOWN
SHEET NO.

sullivanh 1/20/2012 11:20:49 AM CAHSRP-r1.tbl CHSR_half_black3.plt \\usscr1fp001\Cadd\CHSR\60022962\Task-03_Merced-Fresno\cadd\Gen\SHEET\1S-VS-C0001.dgn

NOTES:

1. HORIZONTAL CONTROL DATUM:

   THE HORIZONTAL GRID COORDINATES SHOWN HEREIN ARE BASED UPON THE NORTH AMERICAN DATUM OF 1983 (NAD 83). CALIFORNIA STATE PLANE COORDINATE SYSTEM, ZONE IV.

2. VERTICAL CONTROL DATUM:

   THE VERTICAL DATUM FOR THE EVEVATIONS SHOWN HEREIN ARE BASED UPON THE NORTH AMERICAN VERTICAL DATUM OF 1988 (NAVD 88).

3. PROJECTION:

   LAMBERT CONIC PROJECTION

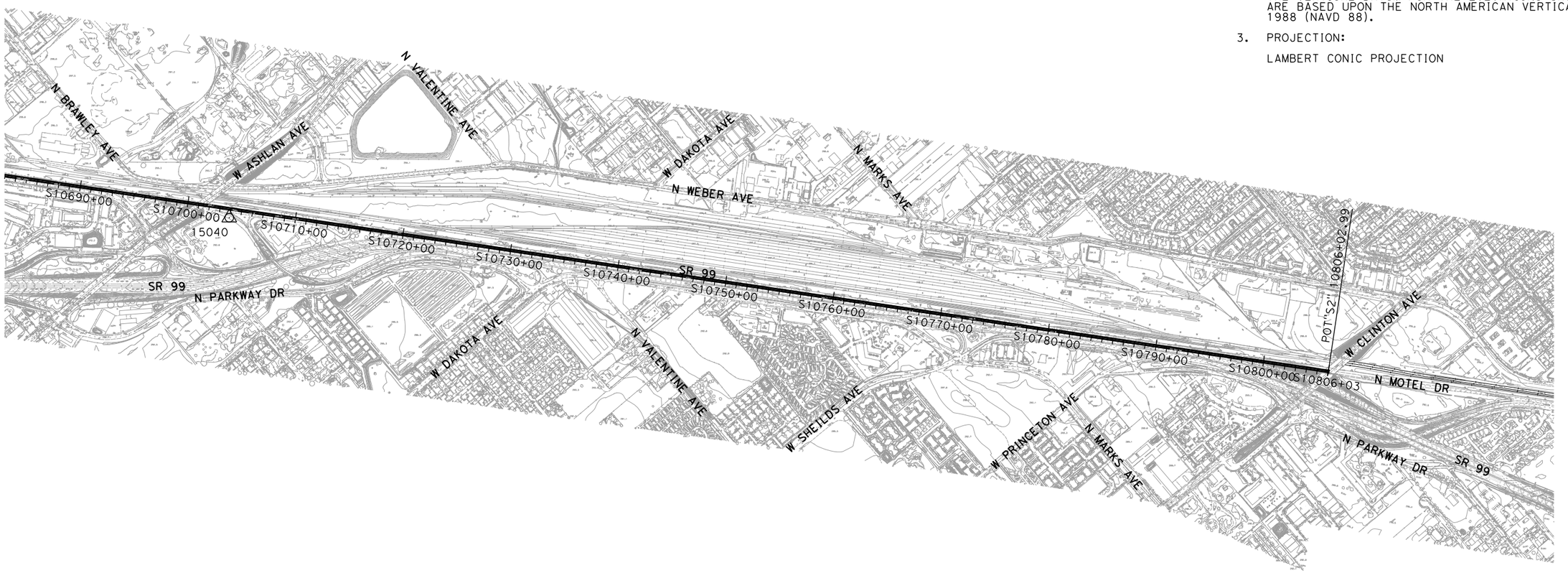

HORIZONTAL AND VERTICAL CONTROL INFORMATION

POINT #	DESCRIPTION	NORTHING	EASTING	ELEVATION
15040	NGS CONTROL: AC6102	2172846.932	6309610.265	292.45

500 0 500 1000

1"=500'

SCALE APPLICABLE FOR FULL SIZE ONLY

REV	DATE	BY	CHK	APP	DESCRIPTION

DESIGNED BY A. SHIELDS
DRAWN BY F. DeMARCO
CHECKED BY S. WONG
IN CHARGE A. BOONE
DATE 02/01/2012

PROPOSED PRELIMINARY DESIGN

NOT FOR CONSTRUCTION

AECOM Technical Services, Inc.
2020 L Street, Suite 300
Sacramento, CA 95811

CH2MHILL

CALIFORNIA HIGH-SPEED RAIL AUTHORITY

CALIFORNIA HIGH-SPEED TRAIN PROJECT
SIERRA SUBDIVISION
PACKAGE 1A
GENERAL
SURVEY CONTROL DATA
SHEET 2 OF 4

CONTRACT NO.
DRAWING NO. VS-C0002
SCALE AS SHOWN
SHEET NO.

shieldsa 2/21/2012 1:46:15 PM cahsrp-r1.tbl chsr_half_black.plt \\usscr1fp001\cadd\chsr\60022962\Task-03_Merced-Fresno\CADD\Gen\SHEET\1S-VS-C0002.dgn

NOTES:

1. FOR LOCATION OF CONTROL POINT # 15037 (S182P)
   SEE SHEET VS-C001

   FOR LOCATION OF CONTROL POINT # S193P
   SEE SHEET VS-C0004

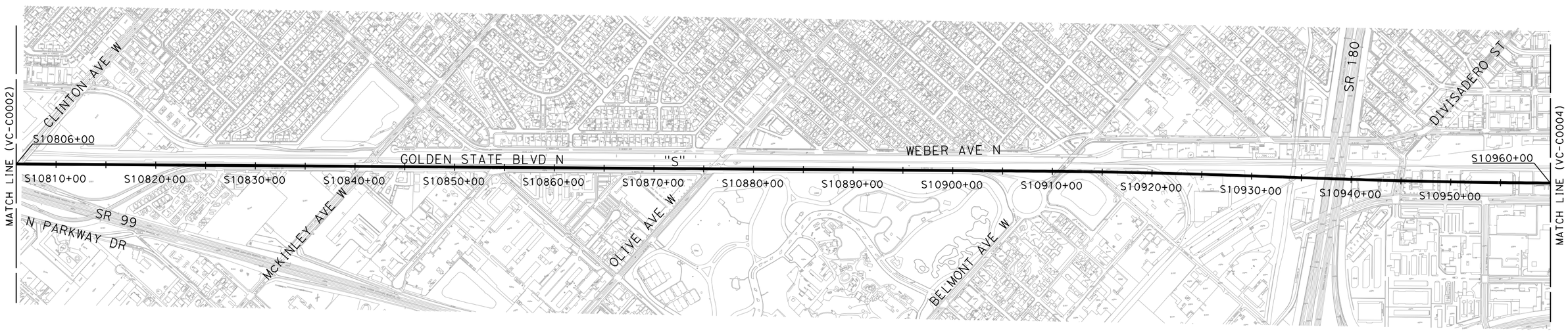

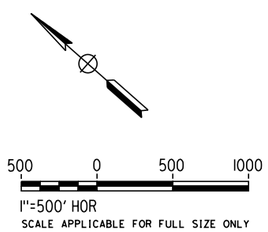

REV	DATE	BY	CHK	APP	DESCRIPTION

DESIGNED BY S. CHRISTENSEN
DRAWN BY S. AVILES
CHECKED BY J. LABANOWSKI
IN CHARGE G. HORTON
DATE 12/08/11

PROPOSED PRELIMINARY DESIGN

NOT FOR CONSTRUCTION

URS | HMM | ARUP
CALIFORNIA HIGH-SPEED TRAIN

CALIFORNIA
HIGH-SPEED RAIL AUTHORITY

CALIFORNIA HIGH-SPEED TRAIN PROJECT
SIERRA SUBDIVISION
PACKAGE 1A
GENERAL
SURVEY CONTROL DATA
SHEET 3 OF 4

CONTRACT NO.
DRAWING NO. VS-C0003
SCALE AS SHOWN
SHEET NO.

carlton_allen 12/7/2011 12:52:18 PM CAHSRP-r1.tbl CHSR_PDF_half_black.pltP:\27560808\03-RPLANS\MASTERS\TOPOS\Control\Major Road\X-FB-XB-Z4-PKGE1A_01.dgn

NOTES:

1. DATA SHOWN HEREON IS BASED ON SURVEY CONTROL MONUMENT DATA SHEETS AND MAP ON FILE IN THE OFFICE OF THE CHSRA

2. HORIZONTAL CONTROL DATUM:

   THE HORIZONTAL GRID COORDINATES SHOWN HEREIN ARE BASED UPON THE NORTH AMERICAN DATUM OF 1983 (NAD83). CALIFORNIA STATE PLANE COORDINATE SYSTEM, ZONE IV, US SURVEY FEET

3. VERTICAL CONTROL DATUM:
   THE VERTICAL CONTROL DATUM FOR THE ELEVATIONS SHOWN HEREIN ARE BASED UPON THE NORTH AMERICAN VERTICAL DATUM OF 1988 (NAVD88), US SURVEY FEET

4. PROJECTION:

   LAMBERT CONIC PROJECTION

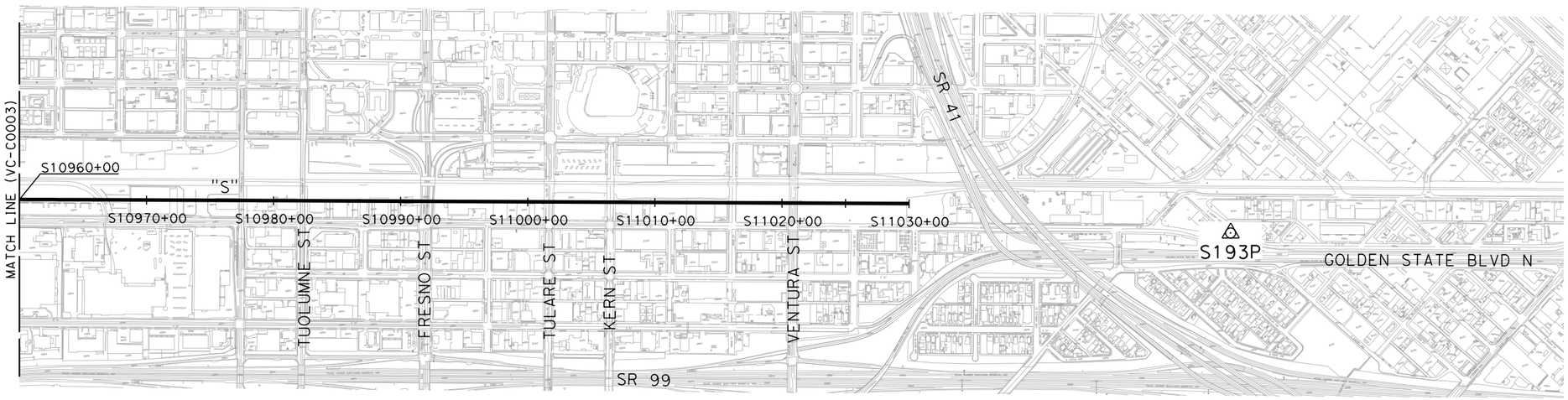

POINT #	DESCRIPTION	N	E	ELEV	LOCATION
		ZONE 4			
S193P	FOUND STANDARD CHSRA 2-1/2" BRONZE DISK IN 1" IRON PIPE IN 8" CONCRETE PIER STAMPED "S193P LS4430 2010"	2146202.84	6332518.62	286.04	IN THE CITY OF FRESNO, COUNTY OF FRESNO, 450 FEET SOUTHERLY ALONG CHERRY AVENUE FROM THE INTERSECTION OF CALIFORNIA AVENUE, 7.8 FEET WESTERLY OF THE WEST CURB FACE OF CHERRY AVENUE, 11.8 FEET NORTHEASTERLY OF THE NORTHEASTERLY CURB FACE OF G STREET.

500 0 500 1000
1"=500' HOR
SCALE APPLICABLE FOR FULL SIZE ONLY

REV	DATE	BY	CHK	APP	DESCRIPTION

DESIGNED BY S. CHRISTENSEN
DRAWN BY S. AVILES
CHECKED BY J. LABANOWSKI
IN CHARGE G. HORTON
DATE 12/08/11

PROPOSED PRELIMINARY DESIGN

NOT FOR CONSTRUCTION

URS | HMM | ARUP
CALIFORNIA HIGH-SPEED TRAIN

CALIFORNIA HIGH-SPEED RAIL AUTHORITY

CALIFORNIA HIGH-SPEED TRAIN PROJECT
SIERRA SUBDIVISION
PACKAGE 1A
GENERAL
SURVEY CONTROL DATA
SHEET 4 OF 4

CONTRACT NO.
DRAWING NO. VS-C0004
SCALE AS SHOWN
SHEET NO.

carlton_allen 12/7/2011 12:52:44 PM CAHSRP-r1.tbl CHSR_PDF_half_black.pltP:\27560808\03-RPLANS\MASTERS\TOPOS\Control\Major Road\X-FB-XB-Z4-PKGE1A_02.dgn

REFER TO SCOPE OF WORK DOCUMENTATION IN THE PROCUREMENT PACKAGE FOR SCOPE REQUIREMENTS. FINAL DESIGN AND DIMENSIONS SHALL BE BASED ON DESIGN CRITERIA MANUAL, DIRECTIVE DRAWINGS, AND STANDARD DRAWINGS REQUIREMENTS.

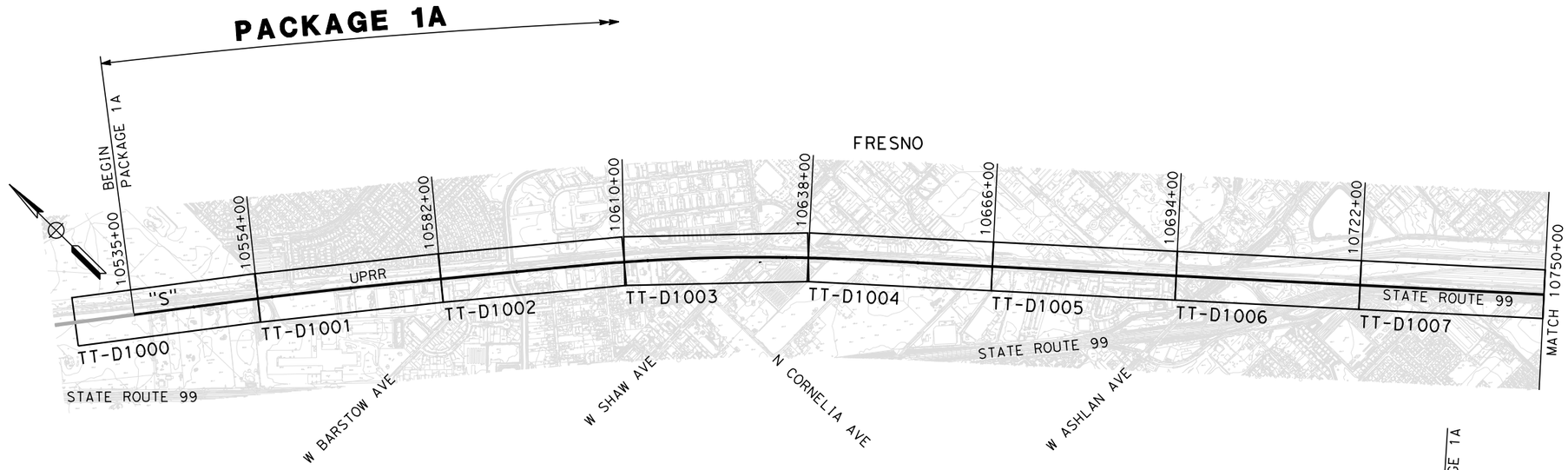

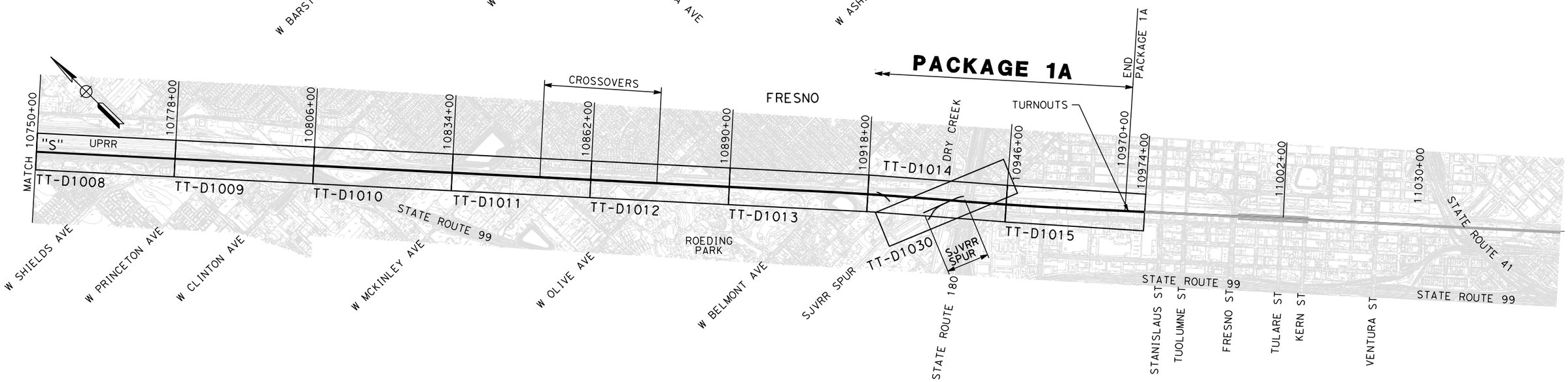

1000 0 1000 2000

1"=1000'

SCALE APPLICABLE FOR FULL SIZE ONLY

REV	DATE	BY	CHK	APP	DESCRIPTION

DESIGNED BY K. SEYMOUR
DRAWN BY P. TONKIN
CHECKED BY D. HUNT
IN CHARGE R. COFFIN
DATE 02/17/12

PROPOSED PRELIMINARY DESIGN

NOT FOR CONSTRUCTION

URS | HMM | ARUP
CALIFORNIA HIGH-SPEED TRAIN

CALIFORNIA HIGH-SPEED RAIL AUTHORITY

CALIFORNIA HIGH-SPEED TRAIN PROJECT
SIERRA SUBDIVISION
PACKAGE 1A
TRACK GUIDEWAY
KEY MAP

CONTRACT NO.
DRAWING NO. TT-B0001
SCALE AS SHOWN
SHEET NO.

Paul.Tonkin 2/15/2012 5:20:54 PM CAHSRP-r1.tbl PDF_half_black_200dpi.pltglobalamericas\Jobs\S-F\131000\131577\4 Internal Project Data\4-03 Drawings\4-03-03 30% Design\4-03-03-05 Design Sheets\Rail\1A

NOTES:

1. TRACKFORM SHOWN IS INDICATIVE.
2. FOR STRUCTURE DIMENSIONS, SEE STRUCTURAL CROSS SECTIONS.
3. SUPERELEVATION IS NOT SHOWN. THE AMOUNT OF APPLIED SUPERELEVATION IS SHOWN IN THE CURVE DATA TABLES.
4. SPACING OF OCS POLES TO BE DETERMINED.
5. FOR DRAINAGE DETAILS, SEE GRADING AND DRAINAGE DRAWINGS.
6. FOR ADDITIONAL ROADWAY INFORMATION, SEE ROADWAY DRAWINGS.

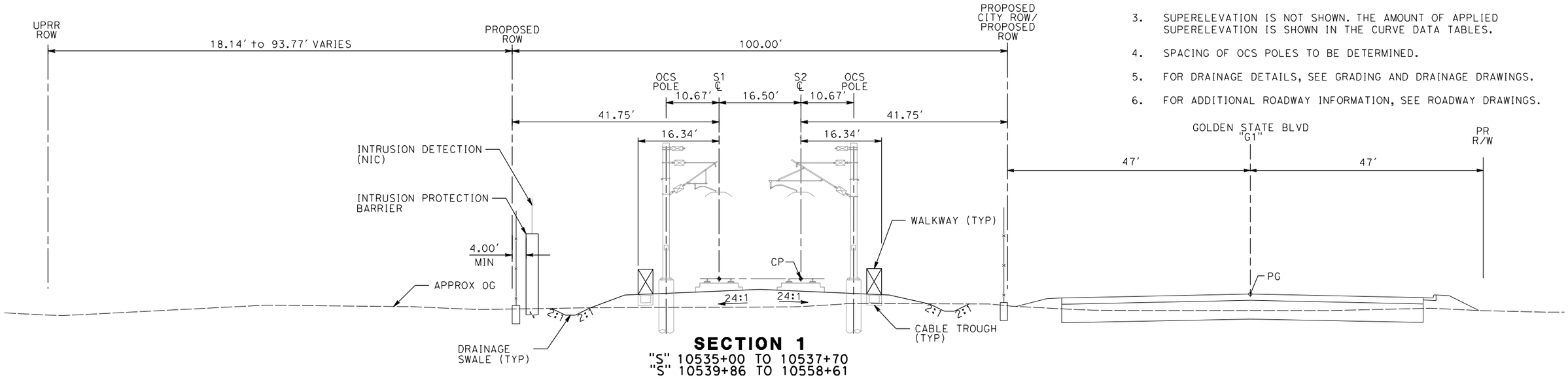

SECTION 1
"S" 10535+00 TO 10537+70
"S" 10539+86 TO 10558+61
TWIN TRACK AT GRADE CENTERED 100 FT ROW WITH OPEN DRAINAGE

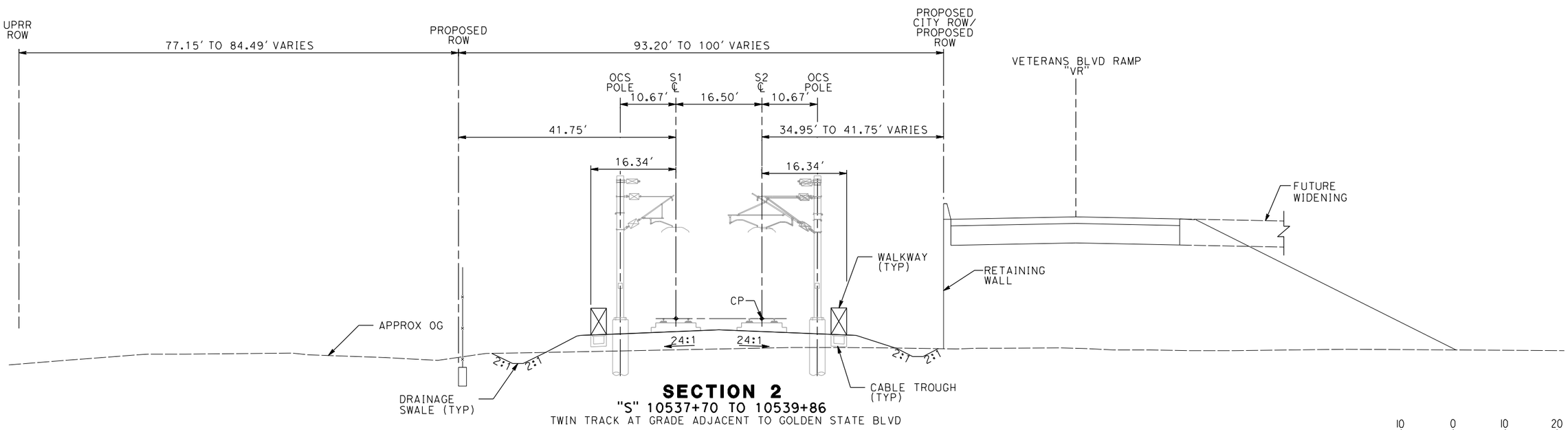

SECTION 2
"S" 10537+70 TO 10539+86
TWIN TRACK AT GRADE ADJACENT TO GOLDEN STATE BLVD

10 0 10 20
1"=10'

REV	DATE	BY	CHK	APP	DESCRIPTION

DESIGNED BY A. SHIELDS
DRAWN BY H. SULLIVAN
CHECKED BY A. BOONE
IN CHARGE A. BOONE
DATE 01/09/2012

PROPOSED PRELIMINARY DESIGN

NOT FOR CONSTRUCTION

AECOM Technical Services, Inc.
2020 L Street, Suite 300
Sacramento, CA 95811
CH2MHILL

CALIFORNIA HIGH-SPEED RAIL AUTHORITY

CALIFORNIA HIGH-SPEED TRAIN PROJECT
SIERRA SUBDIVISION
PACKAGE 1A
TRACK GUIDEWAY
TYPICAL SECTIONS

CONTRACT NO.
DRAWING NO. TT-D3001
SCALE AS SHOWN
SHEET NO.

sullivann 1/20/2012 11:24:20 AM CAHSRP-r1.tbl CHSR_half_black3.plt \\usscr1fp001\Cadd\CHSR\60022962\Task-03_Merced-Fresno\cadd\Rail\Sheet\1S-TT-D3001.dgn

NOTES:

1. FOR ADDITIONAL NOTES SEE DRAWING TT-D001.

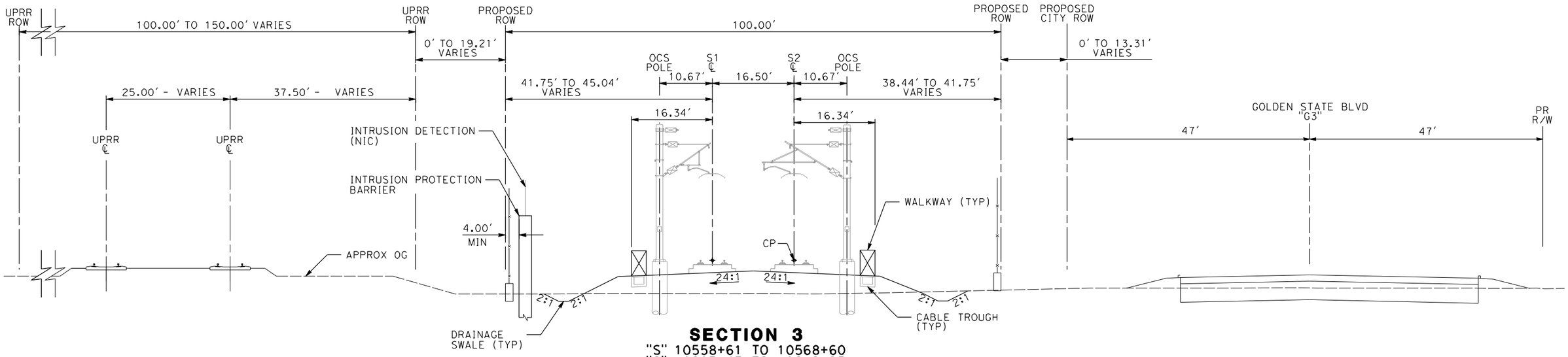

SECTION 3

"S" 10558+61 TO 10568+60
"S" 10605+43 TO 10612+95

TWIN TRACK AT GRADE ADJACENT TO UPRR CENTERED 100 FT ROW WITH OPEN DRAINAGE

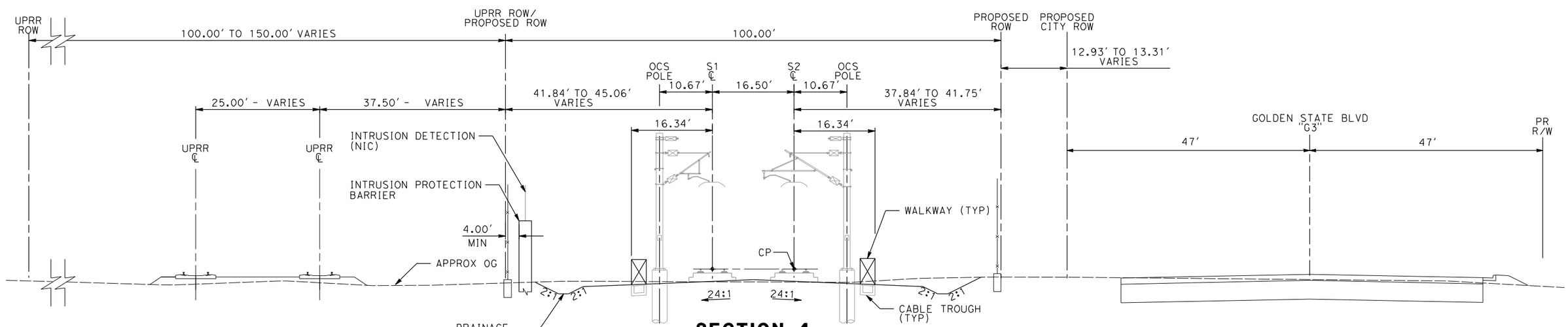

SECTION 4

"S" 10568+60 TO 10592+37
"S" 10593+01 TO 10605+43

TWIN TRACK AT GRADE ADJACENT TO UPRR NOT CENTERED 100' ROW WITH OPEN DRAINAGE

10 0 10 20
1"=10'

REV	DATE	BY	CHK	APP	DESCRIPTION

DESIGNED BY A. SHIELDS
DRAWN BY H. SULLIVAN
CHECKED BY A. BOONE
IN CHARGE A. BOONE
DATE 01/09/2012

PROPOSED PRELIMINARY DESIGN

NOT FOR CONSTRUCTION

AECOM Technical Services, Inc.
2020 L Street, Suite 300
Sacramento, CA 95811
CH2MHILL

CALIFORNIA HIGH-SPEED RAIL AUTHORITY

CALIFORNIA HIGH-SPEED TRAIN PROJECT
SIERRA SUBDIVISION
PACKAGE 1A
TRACK GUIDEWAY
TYPICAL SECTIONS

CONTRACT NO.
DRAWING NO. TT-D3002
SCALE AS SHOWN
SHEET NO.

sullivanh 1/20/2012 11:26:32 AM CAHSRP-r1.tbl CHSR_half_black3.plt \\usscr1fp001\Cadd\CHSR\60022962\Task-03_Merced-Fresno\cadd\Rail\Sheet\15-TT-D3002.dgn

NOTES:

1. FOR ADDITIONAL NOTES, SEE DRAWING TT-D001.

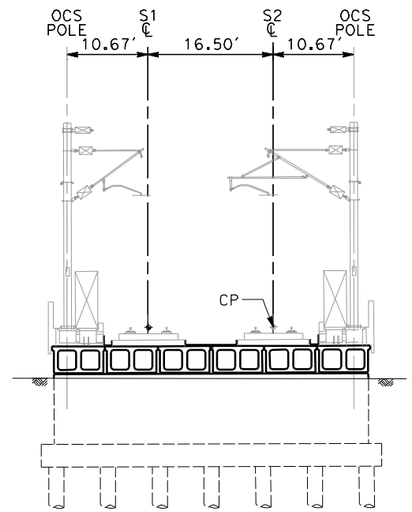

SECTION 5

"S" 10592+37 TO 10593+01

TWIN TRACK OVER HERNDON CANAL

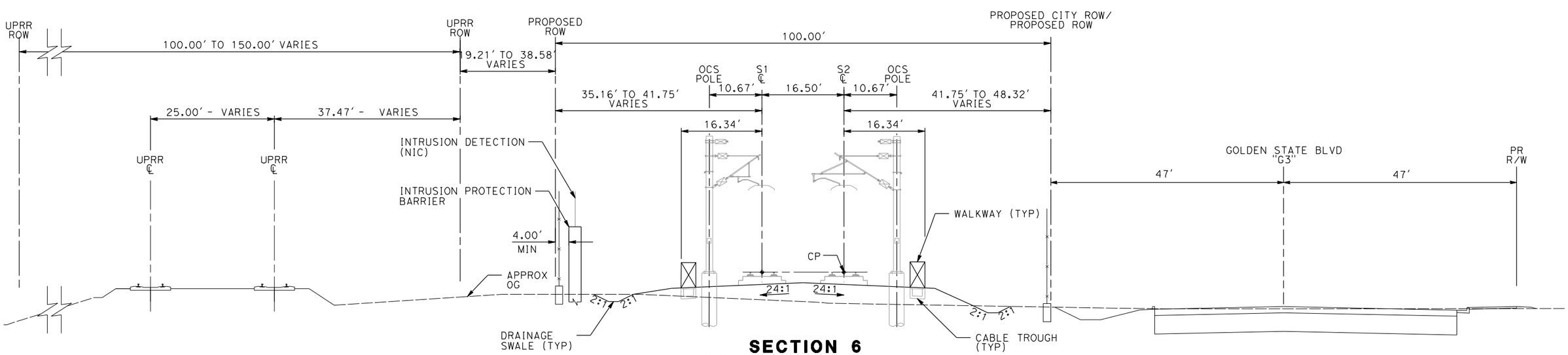

SECTION 6

"S" 10612+95 TO 10638+00

TWIN TRACK AT GRADE ADJACENT TO GOLDEN STATE BLVD CENTERED 100 FT ROW WITH OPEN DRAINAGE

REV	DATE	BY	CHK	APP	DESCRIPTION

DESIGNED BY A. SHIELDS
DRAWN BY H. SULLIVAN
CHECKED BY A. BOONE
IN CHARGE A. BOONE
DATE 01/09/2012

PROPOSED PRELIMINARY DESIGN

NOT FOR CONSTRUCTION

AECOM Technical Services, Inc.
2020 L Street, Suite 300
Sacramento, CA 95811

CH2MHILL

CALIFORNIA HIGH-SPEED RAIL AUTHORITY

CALIFORNIA HIGH-SPEED TRAIN PROJECT
SIERRA SUBDIVISION
PACKAGE 1A
TRACK GUIDEWAY
TYPICAL SECTIONS

CONTRACT NO.
DRAWING NO. TT-D3003
SCALE AS SHOWN
SHEET NO.

sullivanh 1/20/2012 11:27:17 AM CAHSRP-r1.tbl CHSR_half_black3.plt \\ussc r1fp001\Cadd\CHSR\60022962\Task-03_Merced-Fresno\cadd\Rail\Sheet\1S-TT-D3003.dgn

NOTES:

1. FOR ADDITIONAL NOTES, SEE DRAWING TT-D001.

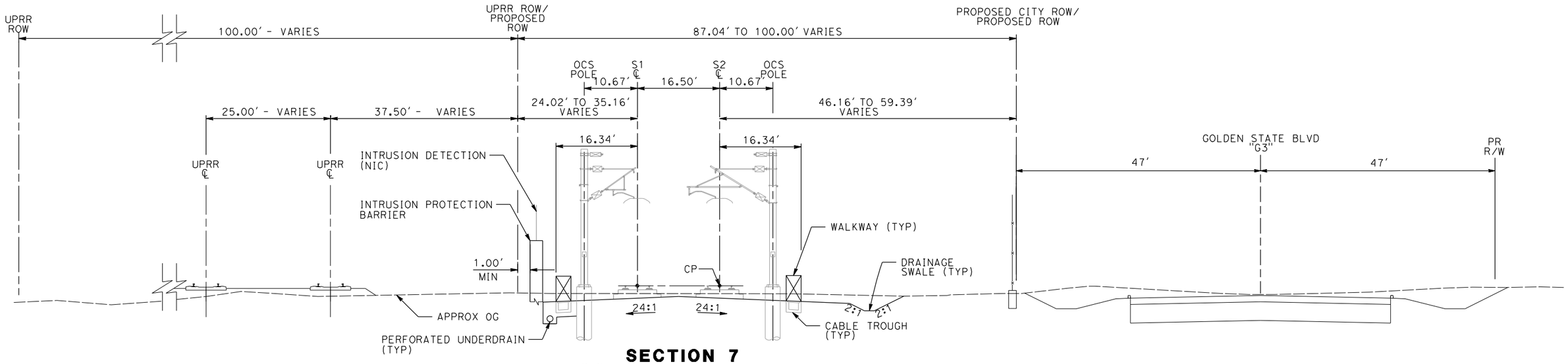

SECTION 7

"S" 10638+00 TO 10693+50

TWIN TRACK AT GRADE ADJACENT TO GOLDEN STATE BLVD NOT CENTERED 100 FT ROW WITH OPEN DRAINAGE

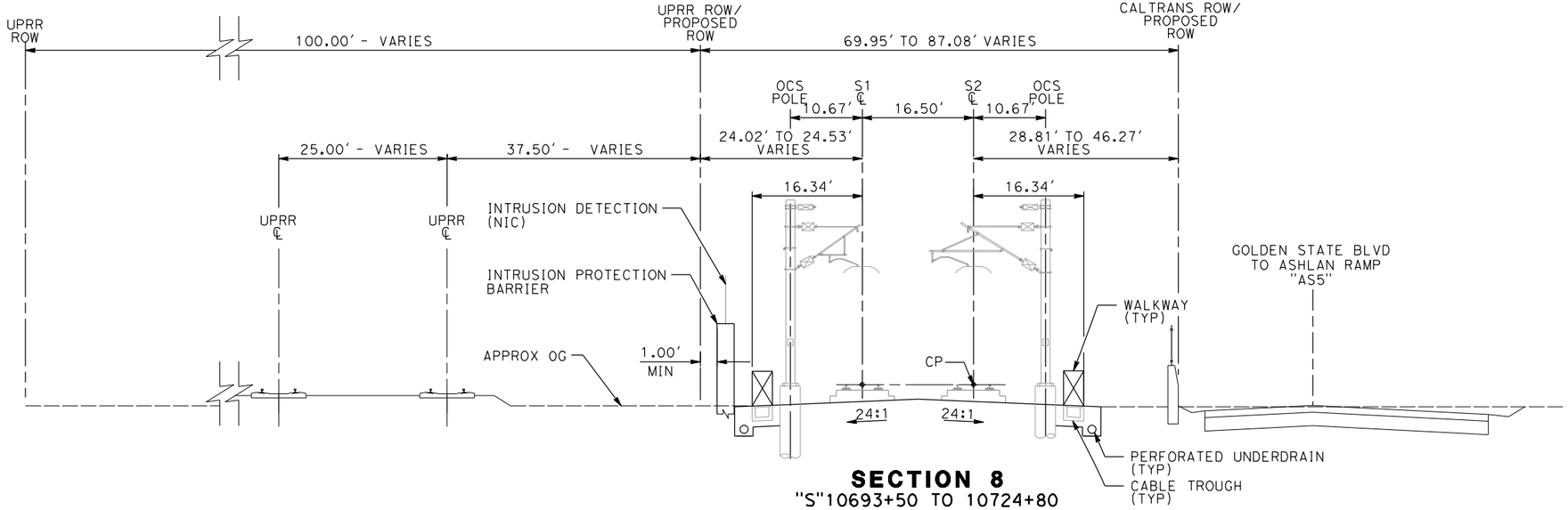

SECTION 8

"S"10693+50 TO 10724+80

TWIN TRACK AT GRADE ADJACENT TO NB ASHLAND AVE OFF RAMP

10 0 10 20

1"=10'

REV	DATE	BY	CHK	APP	DESCRIPTION

DESIGNED BY A. SHIELDS
DRAWN BY H. SULLIVAN
CHECKED BY A. BOONE
IN CHARGE A. BOONE
DATE 01/09/2012

PROPOSED PRELIMINARY DESIGN

NOT FOR CONSTRUCTION

AECOM Technical Services, Inc.
2020 L Street, Suite 300
Sacramento, CA 95811

CH2MHILL

CALIFORNIA HIGH-SPEED RAIL AUTHORITY

CALIFORNIA HIGH-SPEED TRAIN PROJECT
SIERRA SUBDIVISION
PACKAGE 1A
TRACK GUIDEWAY
TYPICAL SECTIONS

CONTRACT NO.
DRAWING NO. TT-D3004
SCALE AS SHOWN
SHEET NO.

sullivann 1/20/2012 11:28:29 AM CAHSRP-r1.tbl CHSR_half_black3.plt \\ussc r1fp001\Cadd\CHSR\60022962\Task-03_Merced-Fresno\cadd\Rail\Sheet\1S-TT-D3004.dgn

NOTES:

1. FOR ADDITIONAL NOTES, SEE DRAWING TT-D001.

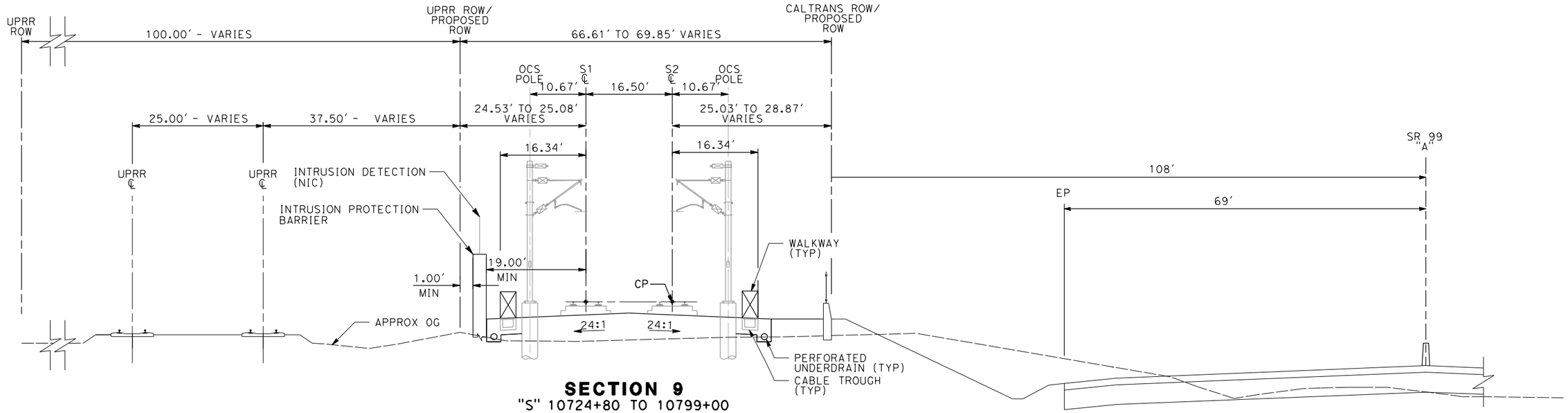

SECTION 9

"S" 10724+80 TO 10799+00

TWIN TRACK AT GRADE ADJACENT TO SR 99

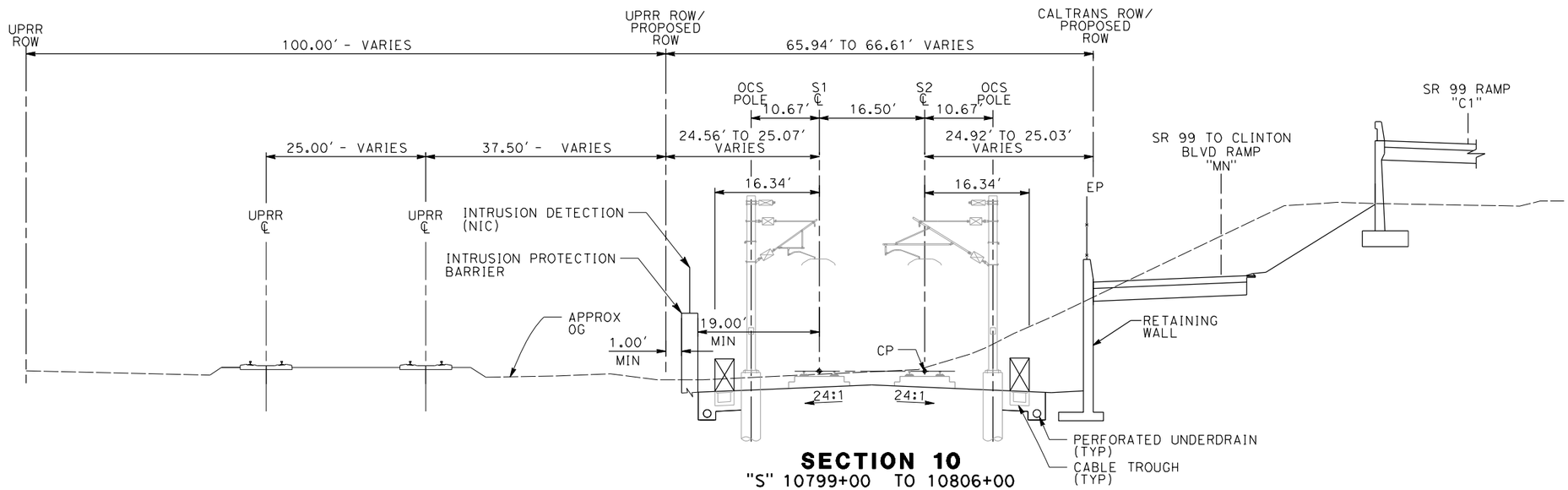

SECTION 10

"S" 10799+00 TO 10806+00

TWIN TRACK AT GRADE ADJACENT TO SR 99 / GOLDEN STATE BLVD

10 0 10 20

1"=10'

REV	DATE	BY	CHK	APP	DESCRIPTION

DESIGNED BY A. SHIELDS
DRAWN BY H. SULLIVAN
CHECKED BY A. BOONE
IN CHARGE A. BOONE
DATE 01/09/2012

PROPOSED PRELIMINARY DESIGN

NOT FOR CONSTRUCTION

AECOM Technical Services, Inc.
2020 L Street, Suite 300
Sacramento, CA 95811

CH2MHILL

CALIFORNIA HIGH-SPEED RAIL AUTHORITY

CALIFORNIA HIGH-SPEED TRAIN PROJECT
SIERRA SUBDIVISION
PACKAGE 1A
TRACK GUIDEWAY
TYPICAL SECTIONS

CONTRACT NO.
DRAWING NO. TT-D3005
SCALE AS SHOWN
SHEET NO.

sullivanh 1/20/2012 11:29:06 AM CAHSRP-r1.tbl CHSR_half_black3.plt \\usscr1fp001\Cadd\CHSR\6002962\Task-03_Merced-Fresno\cadd\Rail\Sheet\15-TT-D3005.dgn

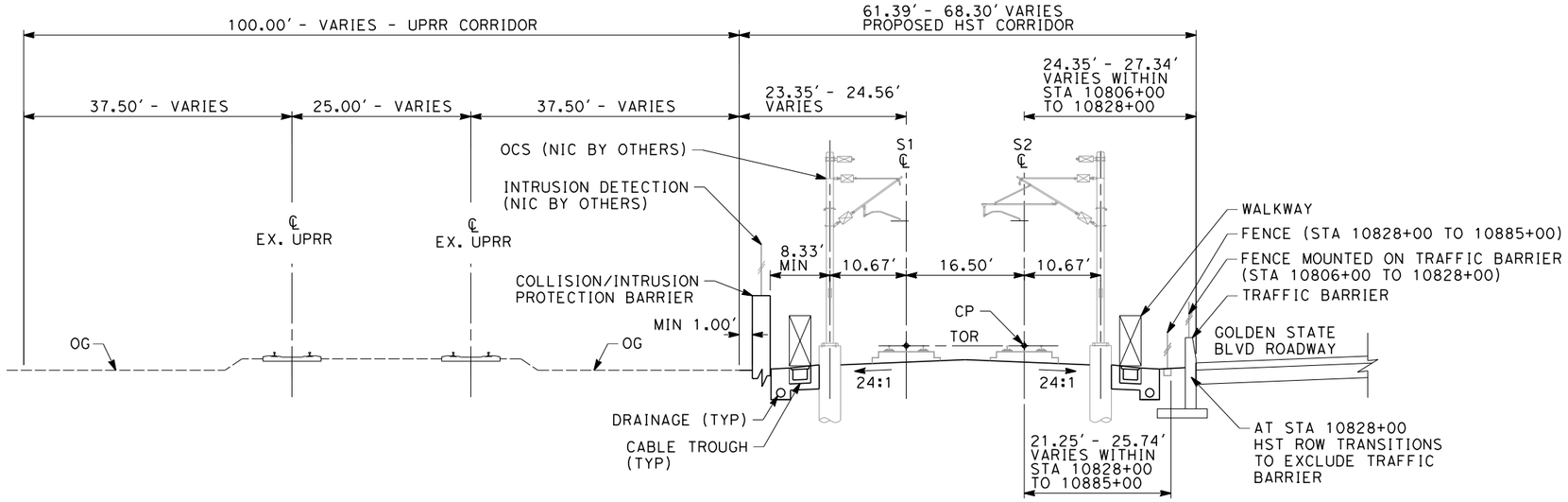

SECTION 11

"S" 10806+00 THROUGH 10885+00

TWIN TRACK AT GRADE ADJACENT TO UPRR

NOTES:

1. TRACKFORM SHOWN FOR INFORMATION ONLY (NIC BY OTHERS).
2. FOR STRUCTURE DIMENSIONS SEE STRUCTURAL TYPICAL SECTIONS.
3. SUPERELEVATION IS NOT SHOWN. THE AMOUNT OF APPLIED SUPERELEVATION IS SHOWN IN THE CURVE DATA TABLES.
4. COLLISION/INTRUSION PROTECTION BARRIER REQUIRED FROM STA 10806+00 - 10950+30

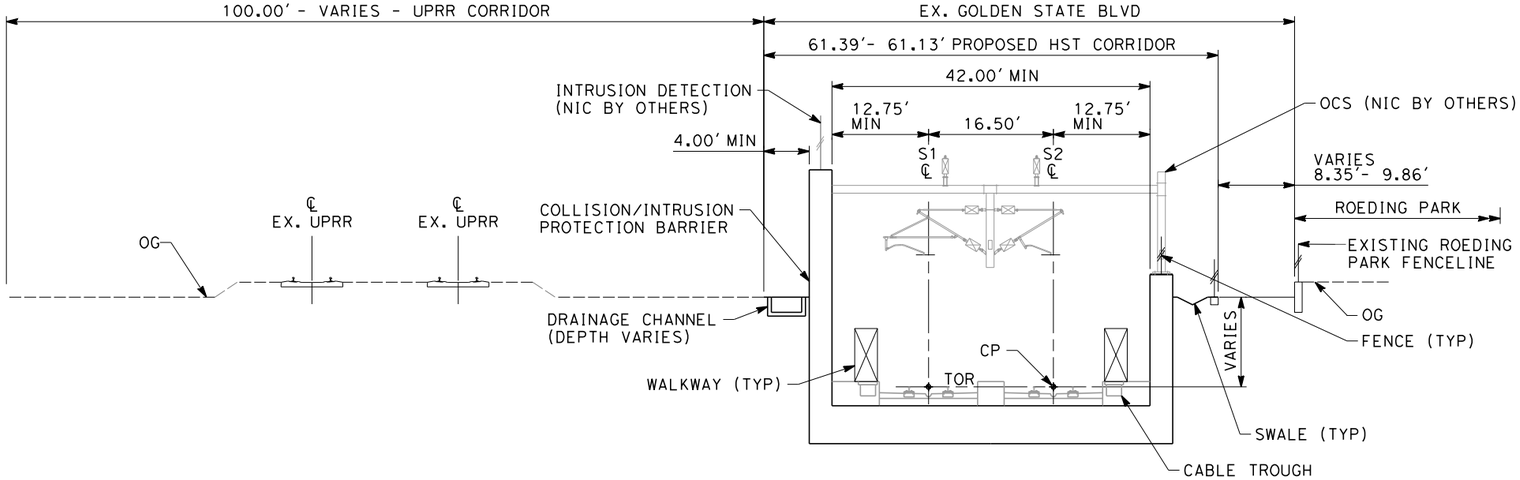

SECTION 12

"S" 10885+00 THROUGH 10902+50

TWIN TRACK IN GRADE SEPARATION ADJACENT TO UPRR AND ROEDING PARK

10 0 10 20

1"=10'

SCALE APPLICABLE FOR FULL SIZE ONLY

REV	DATE	BY	CHK	APP	DESCRIPTION

DESIGNED BY K. SEYMOUR
DRAWN BY P. TONKIN
CHECKED BY D. HUNT
IN CHARGE R. COFFIN
DATE 02/17/12

PROPOSED PRELIMINARY DESIGN

NOT FOR CONSTRUCTION

URS | HMM | ARUP
CALIFORNIA HIGH-SPEED TRAIN

CALIFORNIA HIGH-SPEED RAIL AUTHORITY

CALIFORNIA HIGH-SPEED TRAIN PROJECT
SIERRA SUBDIVISION
PACKAGE 1A
TRACK GUIDEWAY
TYPICAL SECTIONS

CONTRACT NO.
DRAWING NO. TT-D3006
SCALE AS SHOWN
SHEET NO.

Paul.Tonkin 2/16/2012 1:17:31 PM CAHSRP-r1.tbl PDF_half_black_200dpi.pktglobal\americas\Jobs\S-F\131000\131577\4 Internal Project Data\4-03 Drawings\4-03-03 30% Design\4-03-03-05 Design Sheets\Rail\1A

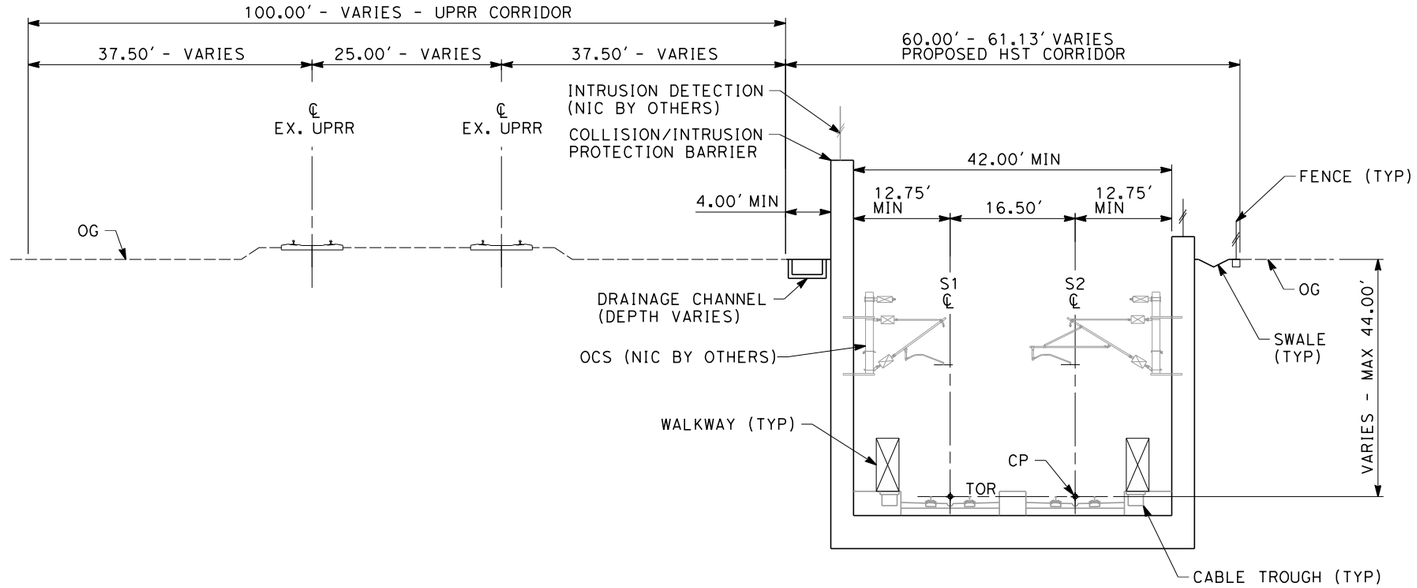

SECTION 13

"S" 10902+50 THROUGH 10936+55
"S" 10940+15 THROUGH 10951+00
ADJACENT TO UPRR

NOTES:

1. TRACKFORM SHOWN FOR INFORMATION ONLY (NIC BY OTHERS).
2. SUPERELEVATION IS NOT SHOWN. THE AMOUNT OF APPLIED SUPERELEVATION IS SHOWN IN THE CURVE DATA TABLES.
3. FOR STRUCTURAL DIMENSIONS SEE STRUCTURAL TYPICAL SECTIONS.
4. COLLISION/INTRUSION PROTECTION BARRIER REQUIRED FROM STA 10806+00 - 10950+30

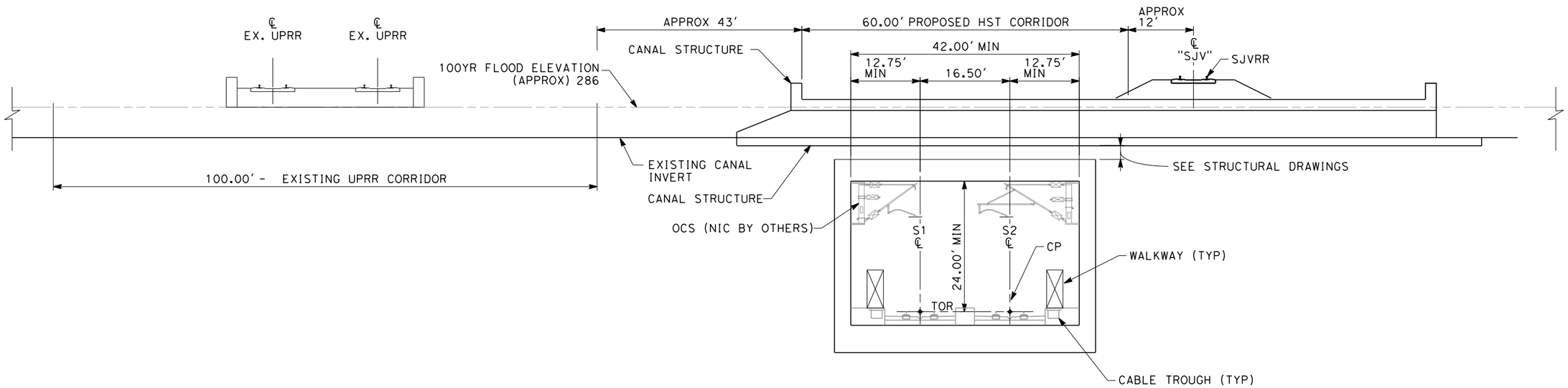

SECTION 14

"S" 10934+05
TWIN TRACK IN GRADE SEPARATION UNDER CANAL

10 0 10 20
1"=10'
SCALE APPLICABLE FOR FULL SIZE ONLY

REV	DATE	BY	CHK	APP	DESCRIPTION

DESIGNED BY K. SEYMOUR
DRAWN BY P. TONKIN
CHECKED BY D. HUNT
IN CHARGE R. COFFIN
DATE 02/17/12

PROPOSED PRELIMINARY DESIGN

NOT FOR CONSTRUCTION

URS | HMM | ARUP
CALIFORNIA HIGH-SPEED TRAIN

CALIFORNIA HIGH-SPEED RAIL AUTHORITY

CALIFORNIA HIGH-SPEED TRAIN PROJECT
SIERRA SUBDIVISION
PACKAGE 1A
TRACK GUIDEWAY
TYPICAL SECTIONS

CONTRACT NO.
DRAWING NO. TT-D3007
SCALE AS SHOWN
SHEET NO.

Paul.Tonkin 2/16/2012 1:19:20 PM CAHSRP-r1.tbl PDF_half_black_200dpi.pktglobal\americas\Jobs\S-F\131000\131577\4 Internal Project Data\4-03 Drawings\4-03-03 30% Design\4-03-05 Design Sheets\Rail\1A

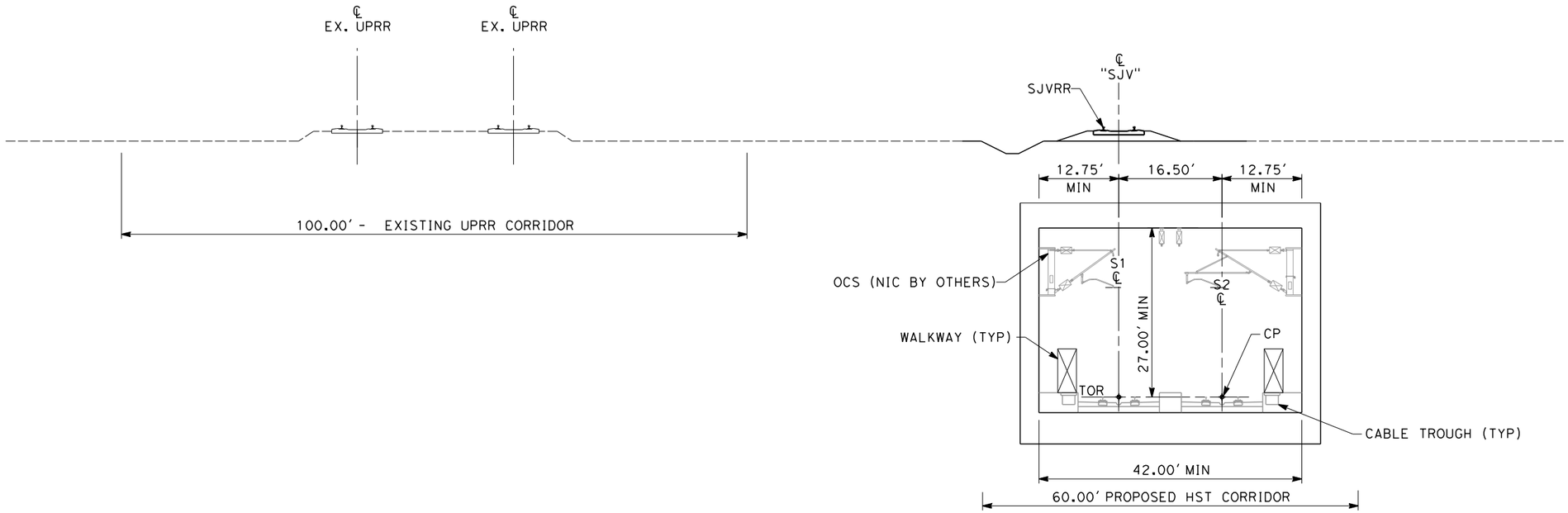

SECTION 15

"S" 10934+90

TWIN TRACK UNDER SJVRR

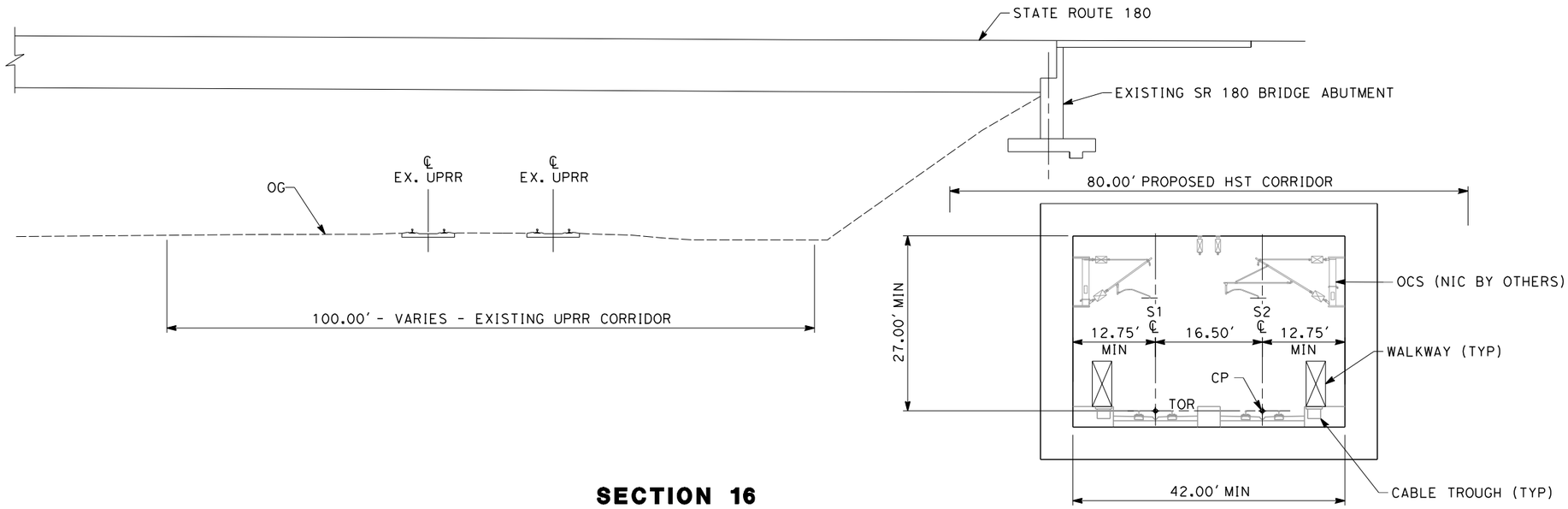

SECTION 16

"S" 10936+55 THROUGH 10940+15

TWIN TRACK IN BOX ADJACENT TO SR-180 ABUTMENT

NOTES:

1. TRACKFORM SHOWN FOR INFORMATION ONLY (NIC BY OTHERS).
2. FOR STRUCTURAL DIMENSIONS SEE STRUCTURAL TYPICAL SECTIONS.
3. SUPERELEVATION IS NOT SHOWN. THE AMOUNT OF APPLIED SUPERELEVATION IS SHOWN IN THE CURVE DATA TABLES.

10 0 10 20

1"=10'

SCALE APPLICABLE FOR FULL SIZE ONLY

REV	DATE	BY	CHK	APP	DESCRIPTION

DESIGNED BY K. SEYMOUR
DRAWN BY P. TONKIN
CHECKED BY D. HUNT
IN CHARGE R. COFFIN
DATE 02/17/12

PROPOSED PRELIMINARY DESIGN

NOT FOR CONSTRUCTION

URS | HMM | ARUP
CALIFORNIA HIGH-SPEED TRAIN

CALIFORNIA HIGH-SPEED RAIL AUTHORITY

CALIFORNIA HIGH-SPEED TRAIN PROJECT
SIERRA SUBDIVISION
PACKAGE 1A
TRACK GUIDEWAY
TYPICAL SECTIONS

CONTRACT NO.
DRAWING NO. TT-D3008
SCALE AS SHOWN
SHEET NO.

Paul.Tonkin 2/16/2012 1:18:35 PM CAHSRP-r1.tbl PDF_half_black_200dpi.pkglobal\americas\Jobs\S-F\131000\131577\4 Internal Project Data\4-03 Drawings\4-03-03 30% Design\4-03-03-05 Design Sheets\Rail\1A

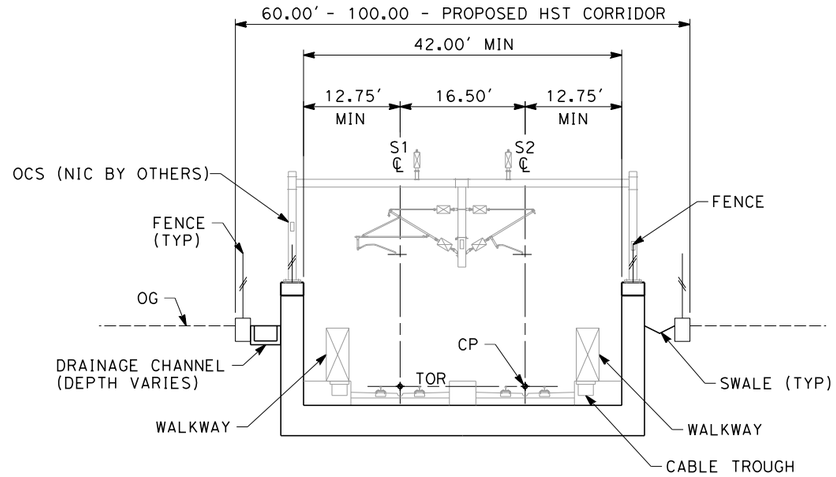

SECTION 17

(PACKAGE 1A)
"S" 10951+00 THROUGH 10970+00
TWIN TRACK IN GRADE SEPARATION

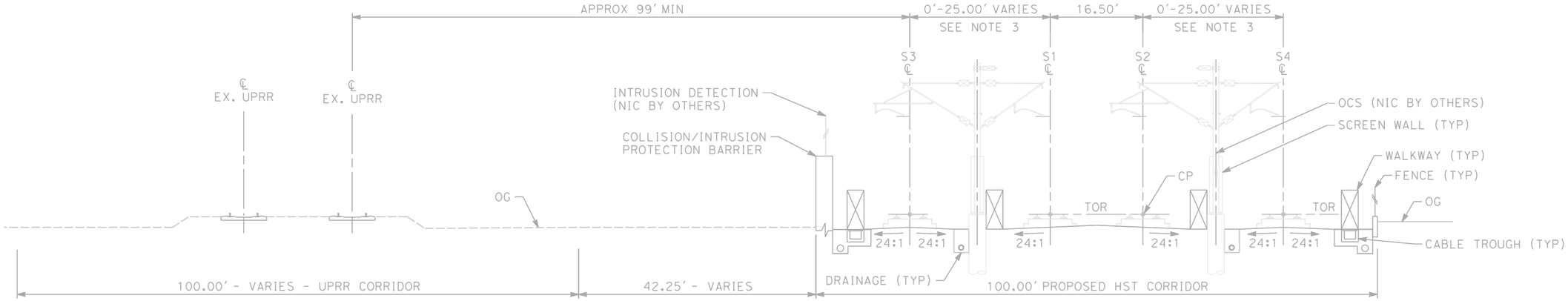

SECTION 18

(PACKAGE 1B)
"S" 10970+00 THROUGH 10991+52
"S" 10992+67 THROUGH 10992+95
"S" 11007+05 THROUGH 11007+80
"S" 11026+00 THROUGH 11030+00
4 TRACK AT GRADE STATION APPROACH

NOTES:

1. TRACKFORM SHOWN FOR INFORMATION ONLY (NIC BY OTHERS).
2. FOR STRUCTURAL DIMENSIONS SEE STRUCTURAL TYPICAL SECTIONS.
3. DISTANCE BETWEEN TRACKS VARIES FROM 0.00'-25.00' THROUGH TURNOUTS AND REVERSE TO PARALLEL.
4. COLLISION/INTRUSION PROTECTION BARRIER REQUIRED FROM STA 10806+00 - 10950+30 AND STA 10990+70 - 11030+00
5. SUPERELEVATION IS NOT SHOWN. THE AMOUNT OF APPLIED SUPERELEVATION IS SHOWN IN THE CURVE DATA TABLES.

10 0 10 20
1"=10'
SCALE APPLICABLE FOR FULL SIZE ONLY

REV	DATE	BY	CHK	APP	DESCRIPTION

DESIGNED BY K. SEYMOUR
DRAWN BY P. TONKIN
CHECKED BY D. HUNT
IN CHARGE R. COFFIN
DATE 02/17/12

PROPOSED PRELIMINARY DESIGN

NOT FOR CONSTRUCTION

URS | HMM | ARUP
CALIFORNIA HIGH-SPEED TRAIN

CALIFORNIA HIGH-SPEED RAIL AUTHORITY

CALIFORNIA HIGH-SPEED TRAIN PROJECT
SIERRA SUBDIVISION
PACKAGE 1A
TRACK GUIDEWAY
TYPICAL SECTIONS

CONTRACT NO.
DRAWING NO. TT-D3009
SCALE AS SHOWN
SHEET NO.

Paul.Tonkin 2/15/2012 5:20:37 PM CAHSRP-r1.tbl PDF_half_black_200dpi.pltglobal\americas\Jobs\S-F\131000\131577\4 Internal Project Data\4-03 Drawings\4-03-03 30% Design\4-03-03-05 Design Sheets\Rail\1A

NOTES:

1. TRACKFORM SHOWN IS INDICATIVE
2. FOR STRUCTURE DIMENSIONS SEE STRUCTURAL CROSS SECTIONS
3. DISTANCE BETWEEN TWO TRACKS VARIES FROM 0-25.00' THROUGH TURNOUTS AND REVERSE TO PARALLEL.

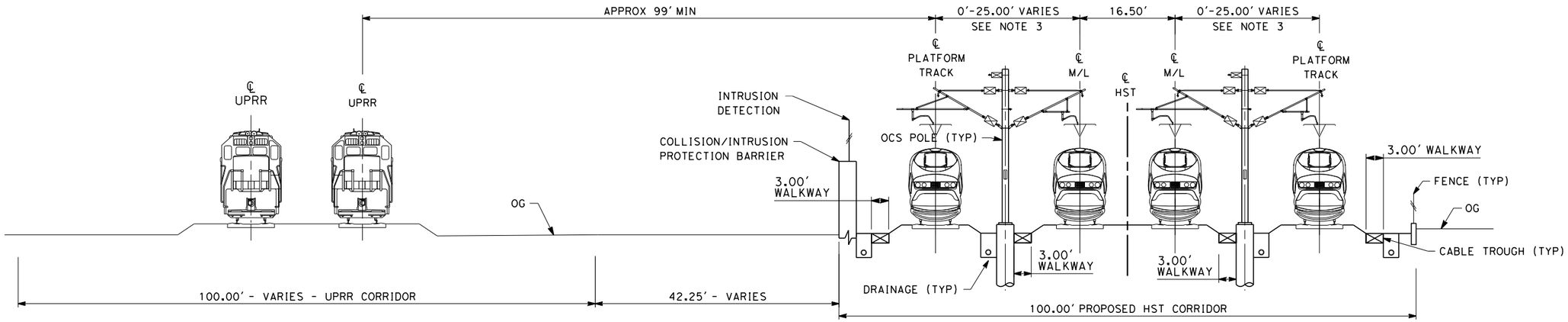

SECTION 1

TWIN TRACK AT GRADE 100FT ROW ADJACENT TO UPRR
STA 257+25 THROUGH STA 278+77
STA 279+92 THROUGH STA 280+20
STA 294+30 THROUGH STA 295+05
STA 313+25 THROUGH STA 317+25

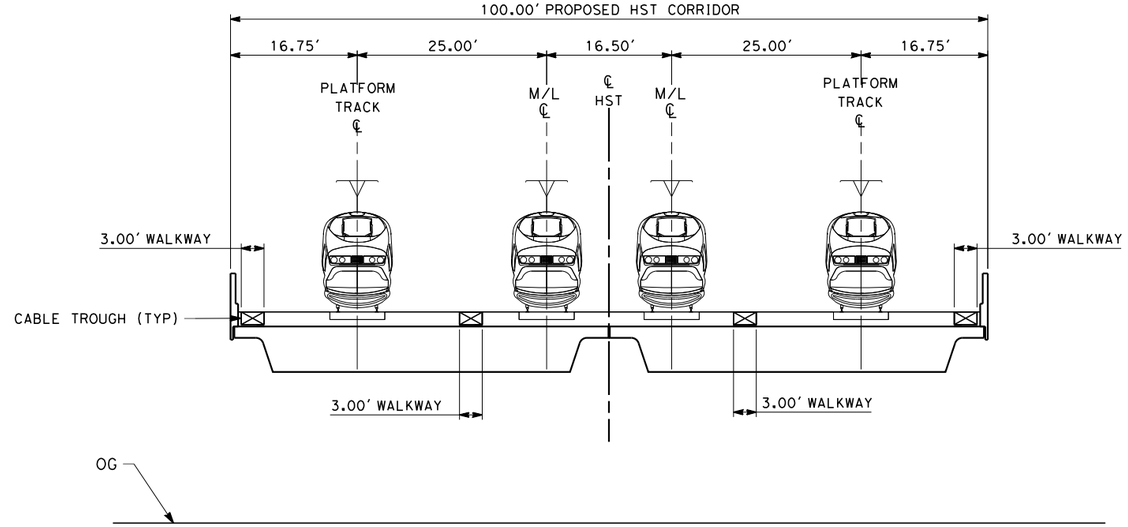

SECTION 2

4 TRACK - BRIDGE STRUCTURE
STA 278+77 THROUGH STA 279+92

10 0 10 20
1"=10'

REV	DATE	BY	CHK	APP	DESCRIPTION

DESIGNED BY K. SEYMOUR
DRAWN BY P. TONKIN
CHECKED BY D. HUNT
IN CHARGE R. COFFIN
DATE 02/15/12

RECORD SET 15% DESIGN SUBMISSION - NOT FOR CONSTRUCTION

URS | HMM | ARUP
CALIFORNIA HIGH-SPEED TRAIN

CALIFORNIA HIGH-SPEED RAIL AUTHORITY

CALIFORNIA HIGH-SPEED TRAIN PROJECT
FRESNO TO BAKERSFIELD
FRESNO SUBSECTION
ALIGNMENT F1
CROSS SECTIONS

CONTRACT NO. HSR 06-0003
DRAWING NO. CB3010
SCALE AS SHOWN
SHEET NO. 18 OF 23

Paul.tonkin 2/13/2012 11:58:04 AM \\global\americas\Jobs\S-F\131000\131577\4 Internal Project Data\4-03 Drawings\4-03-02 15% Redesign\4-03-02-05 Design Sheets\Rail\F1\FB-CB-3010-F1.dgn

NOTES:

1. TRACKFORM SHOWN IS INDICATIVE
2. DISTANCE BETWEEN TRACKS VARIES FROM 0-22.00' THROUGH TURNOUTS AND REVERSE TO PARALLEL.
3. DISTANCE BETWEEN TRACKS VARIES FROM 0-25.00' THROUGH TURNOUTS AND REVERSE TO PARALLEL.
4. HST CORRIDOR WIDTH VARIES THROUGH THE STATION ACCORDING TO THE STATION FACILITIES PROVIDED. SEE STATION DRAWINGS FOR DETAILS.

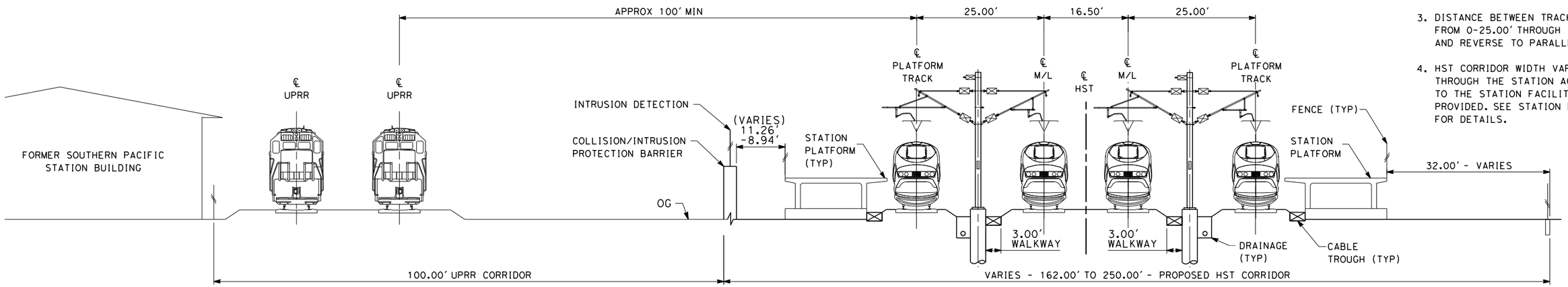

SECTION 3

4 TRACK - AT GRADE STATION PLATFORMS
STA 280+20 THROUGH STA 294+30

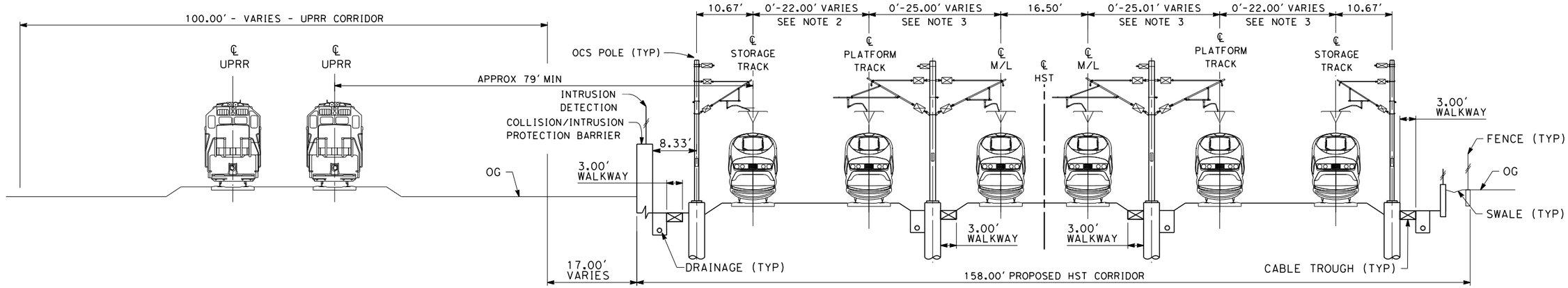

SECTION 4

6 TRACK - AT GRADE STORAGE TRACKS
STA 295+05 THROUGH STA 313+25

10 0 10 20
1"=10'

REV	DATE	BY	CHK	APP	DESCRIPTION

DESIGNED BY K. SEYMOUR
DRAWN BY P. TONKIN
CHECKED BY D. HUNT
IN CHARGE R. COFFIN
DATE 02/15/12

RECORD SET 15% DESIGN SUBMISSION - NOT FOR CONSTRUCTION

URS | HMM | ARUP
CALIFORNIA HIGH-SPEED TRAIN

CALIFORNIA HIGH-SPEED RAIL AUTHORITY

CALIFORNIA HIGH-SPEED TRAIN PROJECT
FRESNO TO BAKERSFIELD
FRESNO SUBSECTION
ALIGNMENT F1
CROSS SECTIONS

CONTRACT NO. HSR 06-0003
DRAWING NO. CB3011
SCALE AS SHOWN
SHEET NO. 19 OF 23

geoff.walker 2/15/2012 10:14:20 AM \\global\americas\Jobs\S-F\131000\131577\4 Internal Project Data\4-03 Drawings\4-03-02 15% Redesign\4-03-02-05 Design Sheets\Rail\F1\FB-CB-3011-F1.dgn

NOTES:

1. THE S1 LINE IS OFFSET TO S2 LINE BY 16.50 FEET.

TRACK GEOMETRY DATA ALONG SOUTHBOUND(S2) TRACK CENTERLINE

CURVE NO.	DESCRIPTION	STATION	NORTHING	EASTING	BEARING	DISTANCE (FT)	R (FT)	Lc (FT)	SPIRAL TYPE	Ls (FT)	Ea (in)	Eu (in)	V (MPH)
	POB	S10535+00.00	2184645.09	6297590.88									
					S51°24'12"E	919.91							250
101	TS	S10544+19.91	2184071.22	6298309.85									
									HALF SINE	1200.00			250
	SC	S10556+19.91	2183320.23	6299245.81			70000.00	1202.39			3.00	0.57	250
	CS	S10568+22.31	2182554.13	6300172.52					HALF SINE	1200.00			250
	ST	S10580+22.31	2181776.12	6301086.14									
					S49°26'13"E	1333.20							250
102	TS	S10593+55.51	2180909.17	6302098.96					HALF SINE	2000.00			250
	SC	S10613+55.51	2179592.62	6303604.36			28000.00	2109.81			6.00	2.93	250
	CS	S10634+65.32	2178107.16	6305101.90					HALF SINE	2000.00			250
	ST	S10654+65.32	2176612.48	6306430.60									
					S41°01'38"E	24843.38							250
103	TS	S10903+08.70	2157870.69	6322738.24					HALF SINE	1000.00			220
	SC	S10913+08.70	2157114.93	6323393.08			71400.00	1002.81			1.50	1.21	220
	CS	S10923+11.52	2156349.26	6324040.66					HALF SINE	1000.00			220
	SS	S10933+11.52	2155578.08	6324677.27					HALF SINE	1000.00			220
104	SC	S10943+11.52	2154806.89	6325313.88			71416.50	1166.50			1.50	1.21	220
	CS	S10954+78.01	2153917.10	6326068.18					HALF SINE	1000.00			220
	ST	S10964+78.01	2153162.84	6326724.75									
					S41°09'29"E	921.99							250
	POT	S10974+00.00	2154806.89	6335459.98									

REV	DATE	BY	CHK	APP	DESCRIPTION

DESIGNED BY A. SHIELDS
DRAWN BY H. SULLIVAN
CHECKED BY A.BOONE
IN CHARGE A. BOONE
DATE 02/01/2012

PROPOSED PRELIMINARY DESIGN

NOT FOR CONSTRUCTION

AECOM Technical Services, Inc.
2020 L Street, Suite 300
Sacramento, CA 95811
CH2MHILL

CALIFORNIA HIGH-SPEED RAIL AUTHORITY

CALIFORNIA HIGH-SPEED TRAIN PROJECT
SIERRA SUBDIVISION
PACKAGE 1A
TRACK GUIDEWAY
HORIZONTAL ALIGNMENT DATA

CONTRACT NO.
DRAWING NO. TT-D0001
SCALE AS SHOWN
SHEET NO.

shieldsa 3/24/2012 9:58:21 AM cansrp-r1.tbl chsr_half_black.plt \\usscrifp001\Cadd\CHSR\60022962\Task-03_Merced-Fresno\CADD\Rail\Sheet\1S-TT-D0001.dgn

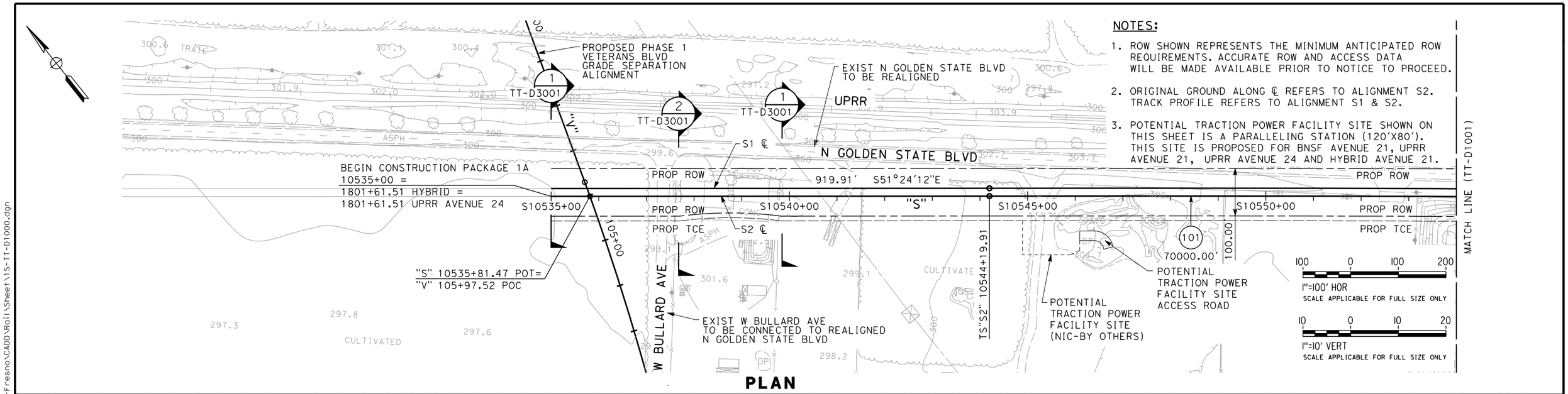

NOTES:

1. ROW SHOWN REPRESENTS THE MINIMUM ANTICIPATED ROW REQUIREMENTS. ACCURATE ROW AND ACCESS DATA WILL BE MADE AVAILABLE PRIOR TO NOTICE TO PROCEED.
2. ORIGINAL GROUND ALONG ℄ REFERS TO ALIGNMENT S2. TRACK PROFILE REFERS TO ALIGNMENT S1 & S2.
3. POTENTIAL TRACTION POWER FACILITY SITE SHOWN ON THIS SHEET IS A PARALLELING STATION (120'X80'). THIS SITE IS PROPOSED FOR BNSF AVENUE 21, UPRR AVENUE 21, UPRR AVENUE 24 AND HYBRID AVENUE 21.

PLAN

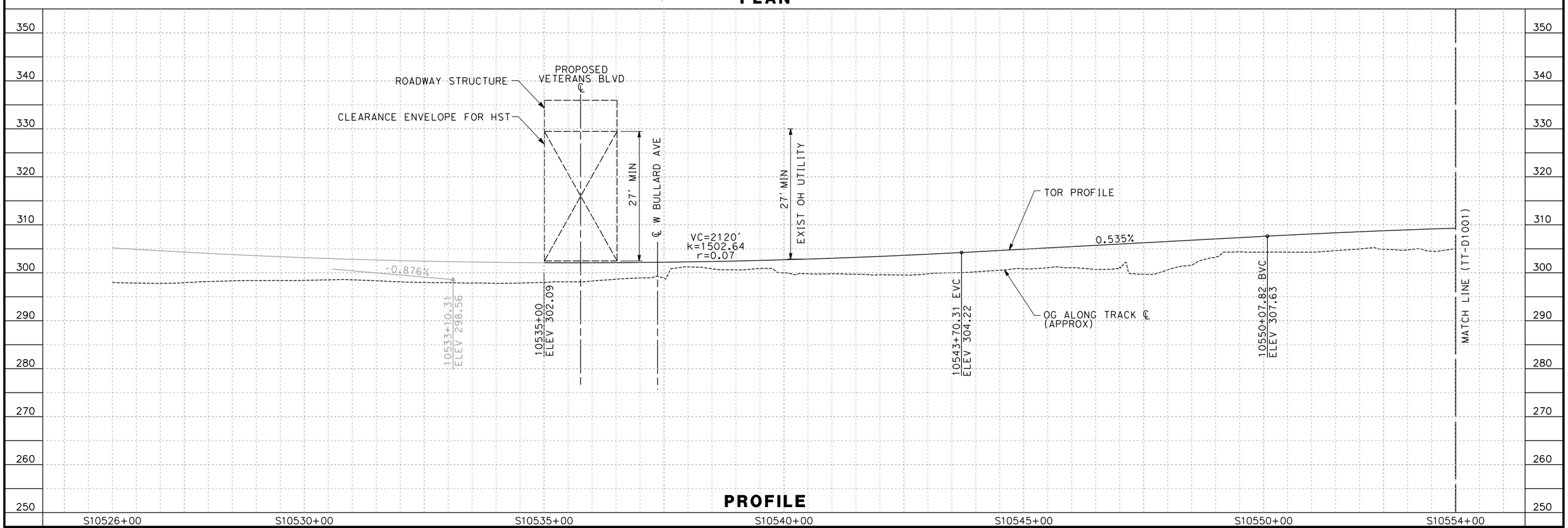

PROFILE

REV	DATE	BY	CHK	APP	DESCRIPTION

DESIGNED BY A. SHIELDS
DRAWN BY H. SULLIVAN
CHECKED BY A. BOONE
IN CHARGE A. BOONE
DATE 02/01/2012

PROPOSED PRELIMINARY DESIGN

NOT FOR CONSTRUCTION

AECOM Technical Services, Inc.
2020 L Street, Suite 300
Sacramento, CA 95811

CH2MHILL

CALIFORNIA HIGH-SPEED RAIL AUTHORITY

CALIFORNIA HIGH-SPEED TRAIN PROJECT
SIERRA SUBDIVISION
PACKAGE 1A
TRACK GUIDEWAY
PLAN AND PROFILE
STA. 10535+00 TO 10554+00

CONTRACT NO.
DRAWING NO. TT-D1000
SCALE AS SHOWN
SHEET NO.

shieldsa 2/13/2012 12:07:30 PM CAHSRP-r1.tbl CHSR_half_black.plt \\usscr1fp001\cadd\chsr\60022962\Task-03_Merced-Fresno\CADD\Rail\Sheet\15-TT-D1000.dgn

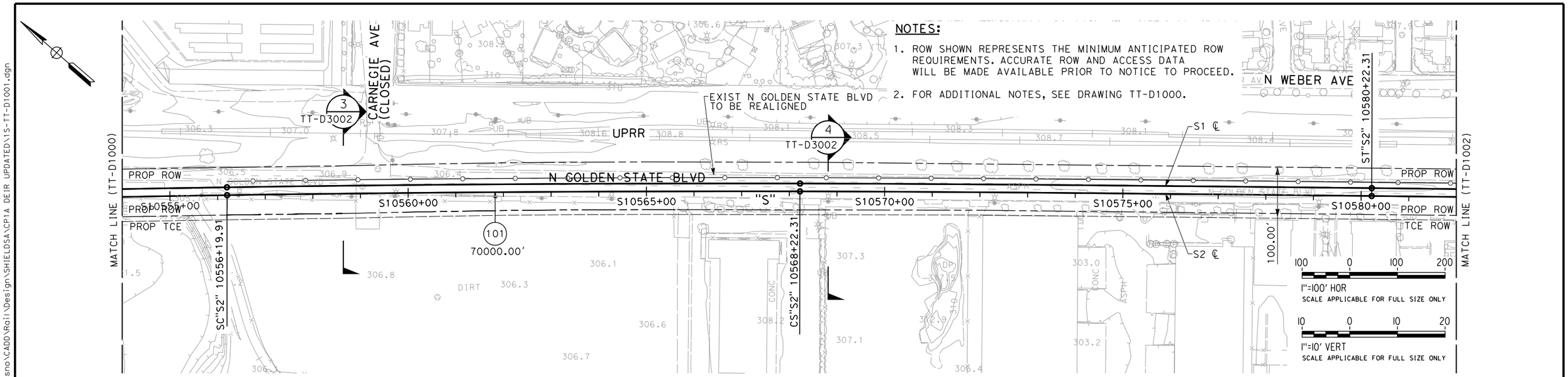

PLAN

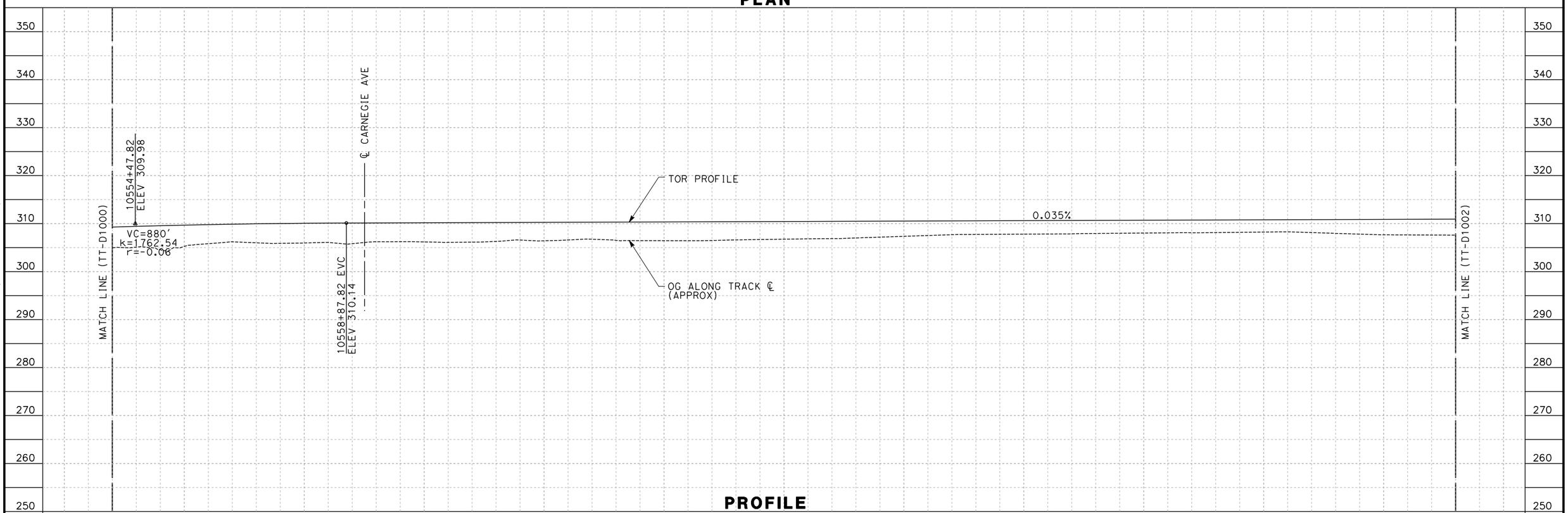

PROFILE

REV	DATE	BY	CHK	APP	DESCRIPTION

DESIGNED BY A. SHIELDS
DRAWN BY H. SULLIVAN
CHECKED BY A. BOONE
IN CHARGE A. BOONE
DATE 02/01/2012

PROPOSED PRELIMINARY DESIGN

NOT FOR CONSTRUCTION

AECOM Technical Services, Inc.
2020 L Street, Suite 300
Sacramento, CA 95811
CH2MHILL

CALIFORNIA HIGH-SPEED RAIL AUTHORITY

CALIFORNIA HIGH-SPEED TRAIN PROJECT
SIERRA SUBDIVISION
PACKAGE 1A
TRACK GUIDEWAY
PLAN AND PROFILE
STA. 10554+00 TO 10582+00

CONTRACT NO.
DRAWING NO. TT-D1001
SCALE AS SHOWN
SHEET NO.

\\usscr1fp001\cadd\chsr\60022962\Task-03_Merced-Fresno\CADD\Rail\Design\SHIELDSA\CP1A DEIR UPDATED\1S-TT-D1001.dgn
CAHSRP-r1.tbl chsr_half_black.plt 2/22/2012 9:21:01 AM shieldsa

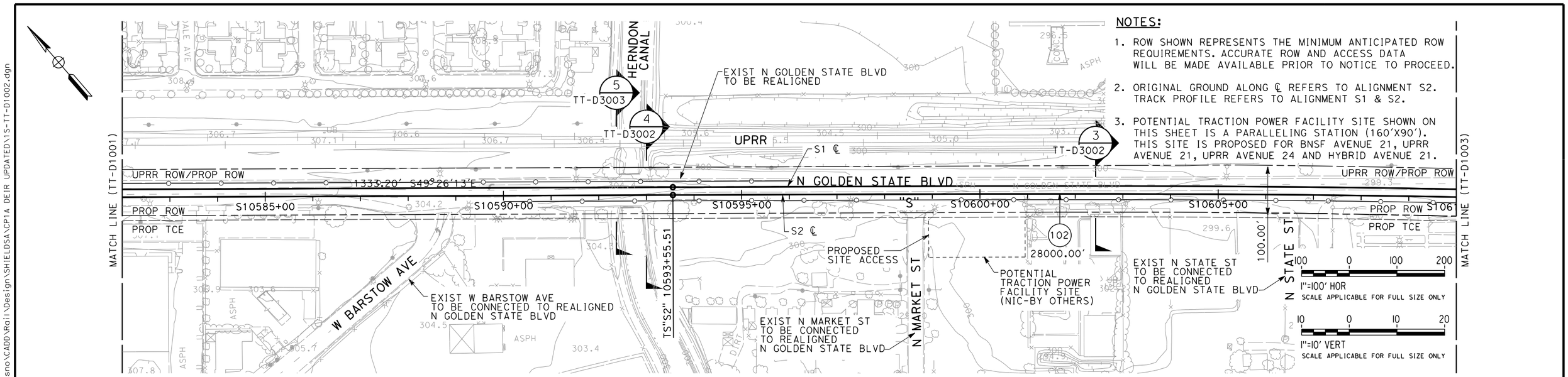

NOTES:

1. ROW SHOWN REPRESENTS THE MINIMUM ANTICIPATED ROW REQUIREMENTS. ACCURATE ROW AND ACCESS DATA WILL BE MADE AVAILABLE PRIOR TO NOTICE TO PROCEED.
2. ORIGINAL GROUND ALONG ℄ REFERS TO ALIGNMENT S2. TRACK PROFILE REFERS TO ALIGNMENT S1 & S2.
3. POTENTIAL TRACTION POWER FACILITY SITE SHOWN ON THIS SHEET IS A PARALLELING STATION (160'X90'). THIS SITE IS PROPOSED FOR BNSF AVENUE 21, UPRR AVENUE 21, UPRR AVENUE 24 AND HYBRID AVENUE 21.

PLAN

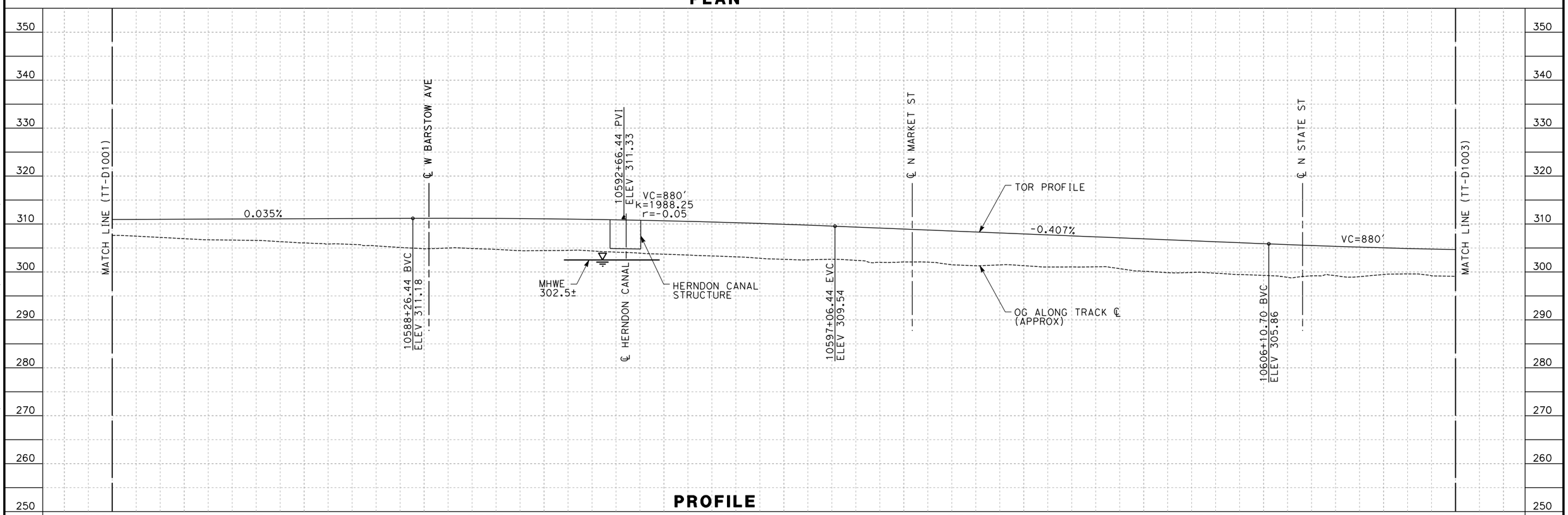

PROFILE

REV	DATE	BY	CHK	APP	DESCRIPTION

DESIGNED BY A. SHIELDS
DRAWN BY H. SULLIVAN
CHECKED BY A. BOONE
IN CHARGE A. BOONE
DATE 02/01/2012

PROPOSED PRELIMINARY DESIGN

NOT FOR CONSTRUCTION

AECOM Technical Services, Inc.
2020 L Street, Suite 300
Sacramento, CA 95811
CH2MHILL

CALIFORNIA HIGH-SPEED RAIL AUTHORITY

CALIFORNIA HIGH-SPEED TRAIN PROJECT
SIERRA SUBDIVISION
PACKAGE 1A
TRACK GUIDEWAY
PLAN AND PROFILE
STA. 10582+00 TO 10610+00

CONTRACT NO.
DRAWING NO. TT-D1002
SCALE AS SHOWN
SHEET NO.

shieldsa 2/22/2012 9:22:52 AM cahsrp-r1.tbl chsr_half_black.plt \\usscr1fp001\cadd\chsr\60022962\Task-03_Merced-Fresno\CADD\Rail\Design\SHIELDSA\CP1A DEIR UPDATED\1S-TT-D1002.dgn

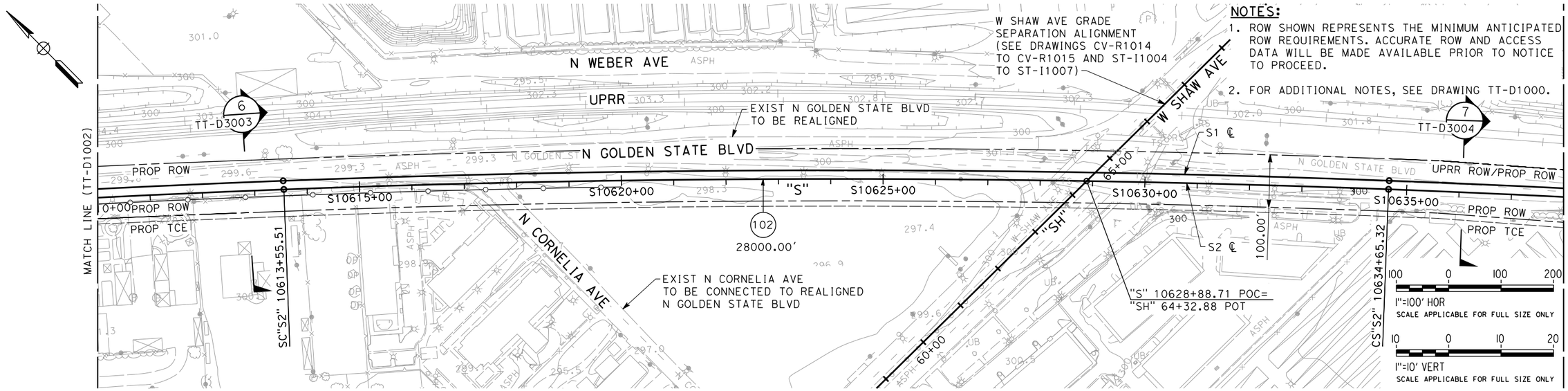

PLAN

NOTES:

1. ROW SHOWN REPRESENTS THE MINIMUM ANTICIPATED ROW REQUIREMENTS. ACCURATE ROW AND ACCESS DATA WILL BE MADE AVAILABLE PRIOR TO NOTICE TO PROCEED.
2. FOR ADDITIONAL NOTES, SEE DRAWING TT-D1000.

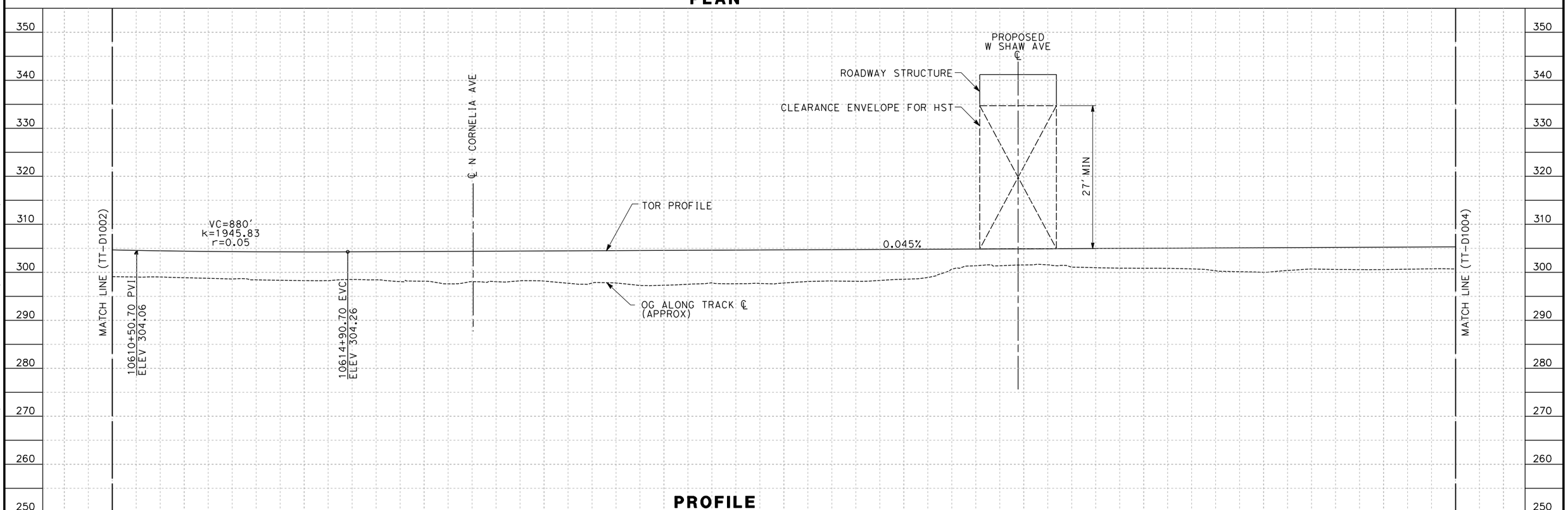

PROFILE

REV	DATE	BY	CHK	APP	DESCRIPTION

DESIGNED BY A. SHIELDS
DRAWN BY H. SULLIVAN
CHECKED BY A. BOONE
IN CHARGE A. BOONE
DATE 02/01/2012

PROPOSED PRELIMINARY DESIGN

NOT FOR CONSTRUCTION

AECOM Technical Services, Inc.
2020 L Street, Suite 300
Sacramento, CA 95811
CH2MHILL

CALIFORNIA HIGH-SPEED RAIL AUTHORITY

CALIFORNIA HIGH-SPEED TRAIN PROJECT
SIERRA SUBDIVISION
PACKAGE 1A
TRACK GUIDEWAY
PLAN AND PROFILE
STA. 10610+00 TO 10638+00

CONTRACT NO.
DRAWING NO. TT-D1003
SCALE AS SHOWN
SHEET NO.

shieldsa 3/24/2012 9:51:44 AM cahsrp-r1.tbl chsr_half_black.plt \\usscr1fp001\Cadd\CHSR\60022962\Task-03_Merced-Fresno\CADD\Rail\Design\SHIELDSA\CP1A DEIR UPDATED\1S-TT-D1003.dgn

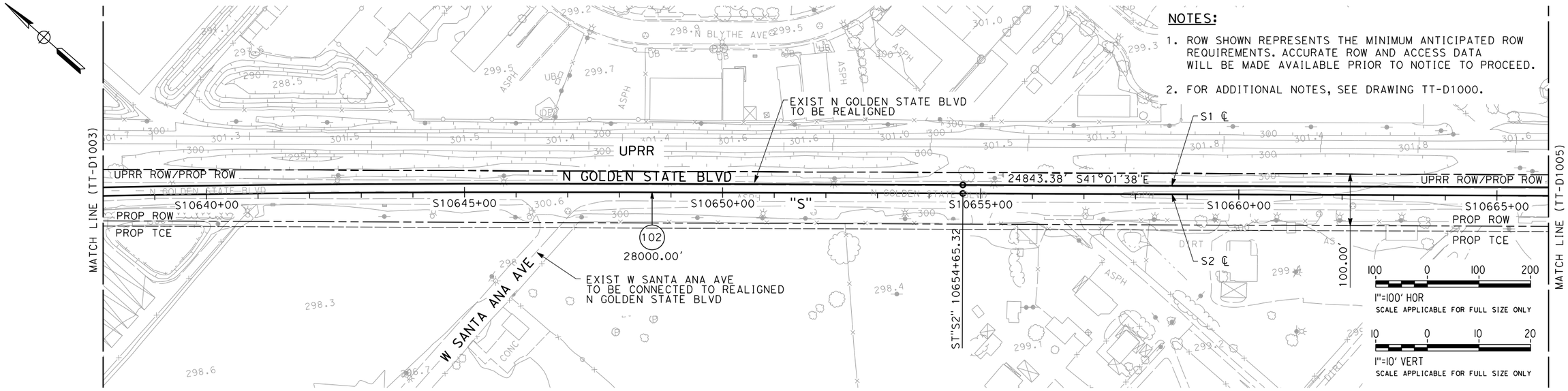

NOTES:

1. ROW SHOWN REPRESENTS THE MINIMUM ANTICIPATED ROW REQUIREMENTS. ACCURATE ROW AND ACCESS DATA WILL BE MADE AVAILABLE PRIOR TO NOTICE TO PROCEED.
2. FOR ADDITIONAL NOTES, SEE DRAWING TT-D1000.

PLAN

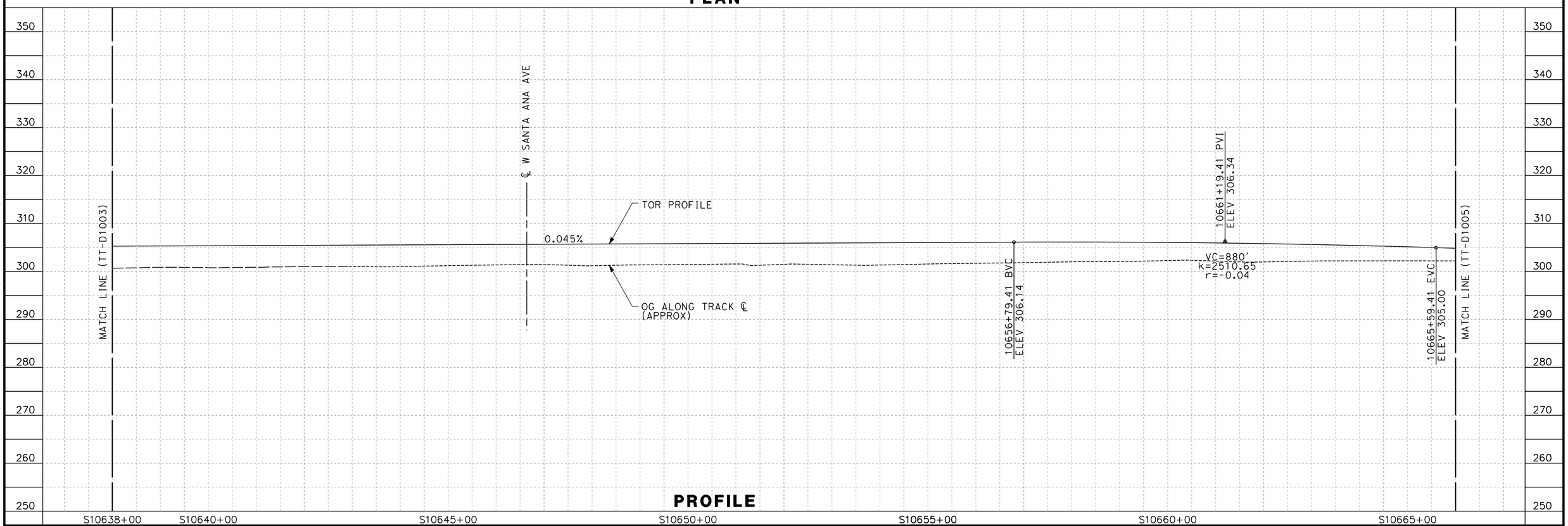

PROFILE

REV	DATE	BY	CHK	APP	DESCRIPTION

DESIGNED BY A. SHIELDS
DRAWN BY H. SULLIVAN
CHECKED BY A. BOONE
IN CHARGE A. BOONE
DATE 12/08/11

PROPOSED PRELIMINARY DESIGN

NOT FOR CONSTRUCTION

AECOM Technical Services, Inc.
2020 L Street, Suite 300
Sacramento, CA 95811
CH2MHILL

CALIFORNIA HIGH-SPEED RAIL AUTHORITY

CALIFORNIA HIGH-SPEED TRAIN PROJECT
SIERRA SUBDIVISION
PACKAGE 1A
TRACK GUIDEWAY
PLAN AND PROFILE
STA. 10638+00 TO 10666+00

CONTRACT NO.
DRAWING NO. TT-D1004
SCALE AS SHOWN
SHEET NO.

\\usscr1fp001\Cadd\CHSR\60022962\Task-03_Merced-Fresno\CADD\Rail\Sheet\15-TT-D1004.dgn
chsr_half_black.plt
cahsrp-r1.tbl
12/6/2011 11:22:51 AM
shieldsa

NOTES:

1. ROW SHOWN REPRESENTS THE MINIMUM ANTICIPATED ROW REQUIREMENTS. ACCURATE ROW AND ACCESS DATA WILL BE MADE AVAILABLE PRIOR TO NOTICE TO PROCEED.
2. FOR ADDITIONAL NOTES, SEE DRAWING TT-D1000.

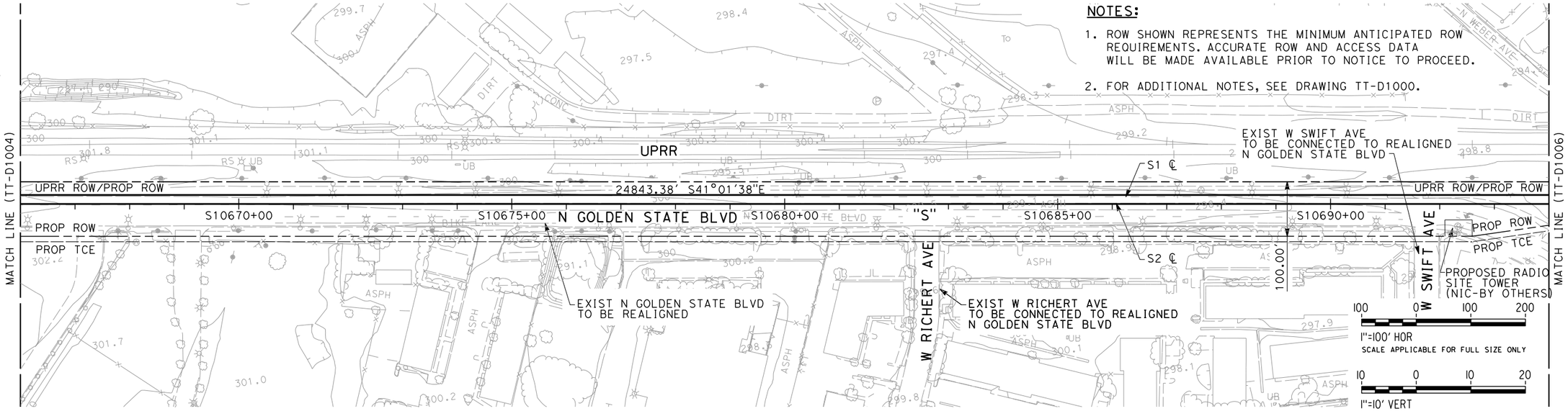

PLAN

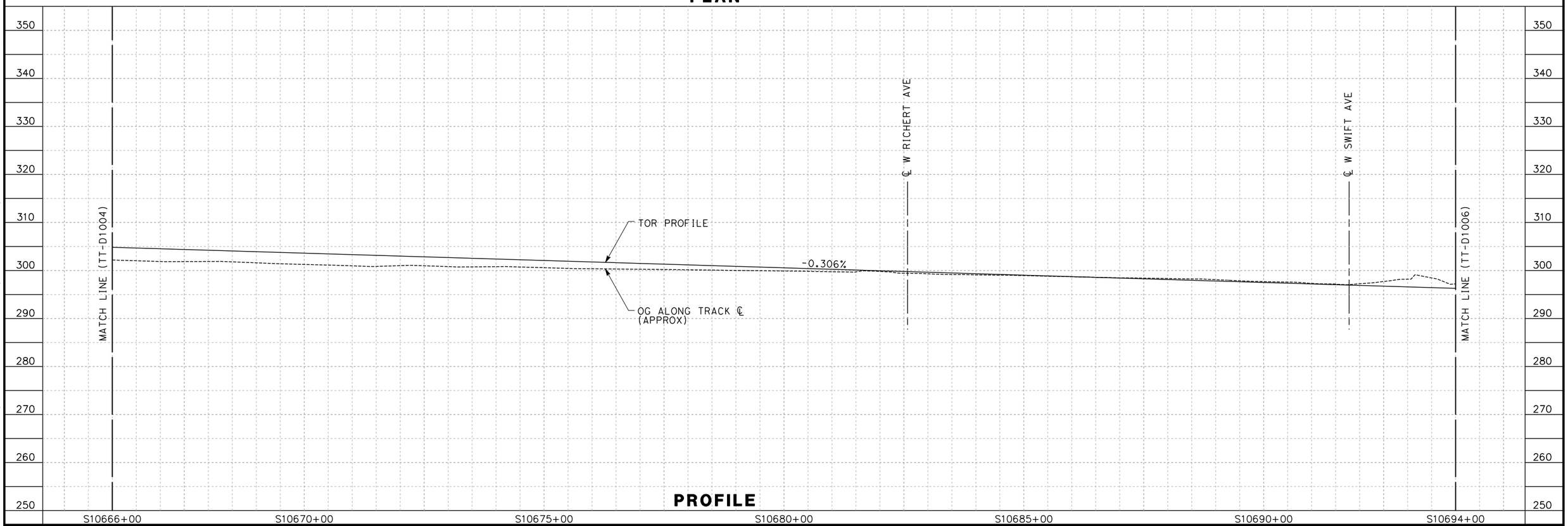

PROFILE

REV	DATE	BY	CHK	APP	DESCRIPTION

DESIGNED BY A. SHIELDS
DRAWN BY H. SULLIVAN
CHECKED BY A. BOONE
IN CHARGE A. BOONE
DATE 12/08/11

PROPOSED PRELIMINARY DESIGN

NOT FOR CONSTRUCTION

AECOM Technical Services, Inc.
2020 L Street, Suite 300
Sacramento, CA 95811
CH2MHILL

CALIFORNIA HIGH-SPEED RAIL AUTHORITY

CALIFORNIA HIGH-SPEED TRAIN PROJECT
SIERRA SUBDIVISION
PACKAGE 1A
TRACK GUIDEWAY
PLAN AND PROFILE
STA. 10666+00 TO 10694+00

CONTRACT NO.
DRAWING NO. TT-D1005
SCALE AS SHOWN
SHEET NO.

12/6/2011 11:23:31 AM cahsrp-r1.tbl chsr_half_black.plt \\usscr1fp001\Cadd\CHSR\60022962\Task-03_Merced-Fresno\CADD\Rail\Sheet\1S-TT-D1005.dgn shieldsa

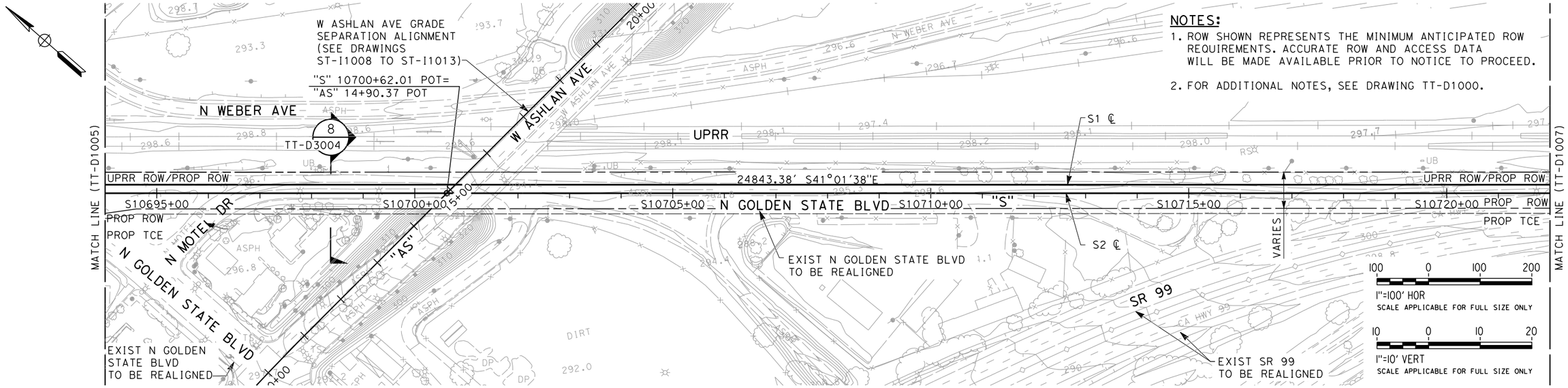

NOTES:

1. ROW SHOWN REPRESENTS THE MINIMUM ANTICIPATED ROW REQUIREMENTS. ACCURATE ROW AND ACCESS DATA WILL BE MADE AVAILABLE PRIOR TO NOTICE TO PROCEED.
2. FOR ADDITIONAL NOTES, SEE DRAWING TT-D1000.

PLAN

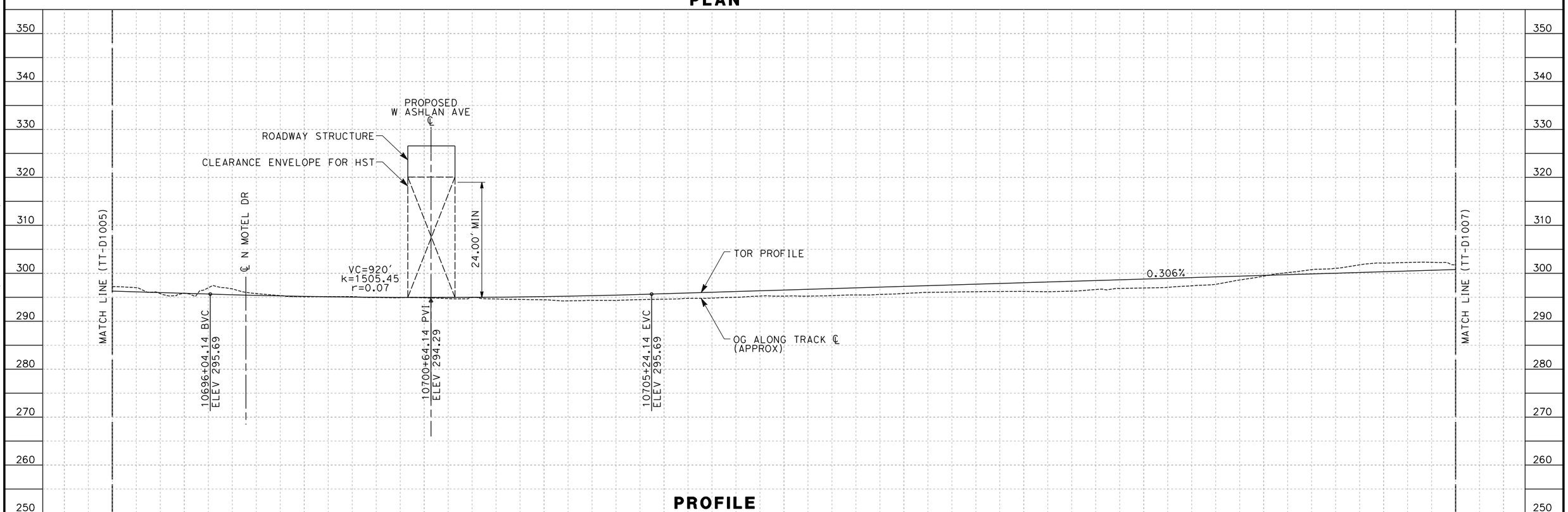

PROFILE

REV	DATE	BY	CHK	APP	DESCRIPTION

DESIGNED BY A. SHIELDS
DRAWN BY H. SULLIVAN
CHECKED BY A. BOONE
IN CHARGE A. BOONE
DATE 12/08/11

PROPOSED PRELIMINARY DESIGN

NOT FOR CONSTRUCTION

AECOM Technical Services, Inc.
2020 L Street, Suite 300
Sacramento, CA 95811
CH2MHILL

CALIFORNIA HIGH-SPEED RAIL AUTHORITY

CALIFORNIA HIGH-SPEED TRAIN PROJECT
SIERRA SUBDIVISION
PACKAGE 1A
TRACK GUIDEWAY
PLAN AND PROFILE
STA. 10694+00 TO 10722+00

CONTRACT NO.
DRAWING NO. TT-D1006
SCALE AS SHOWN
SHEET NO.

shieldsa 12/6/2011 11:51:04 AM CAHSRP-r1.tbl chsr_half_black.plt \\usscr1fp001\Cadd\CHSR\60022962\Task-03_Merced-Fresno\CADD\Rail\Sheet\15-TT-D1006.dgn

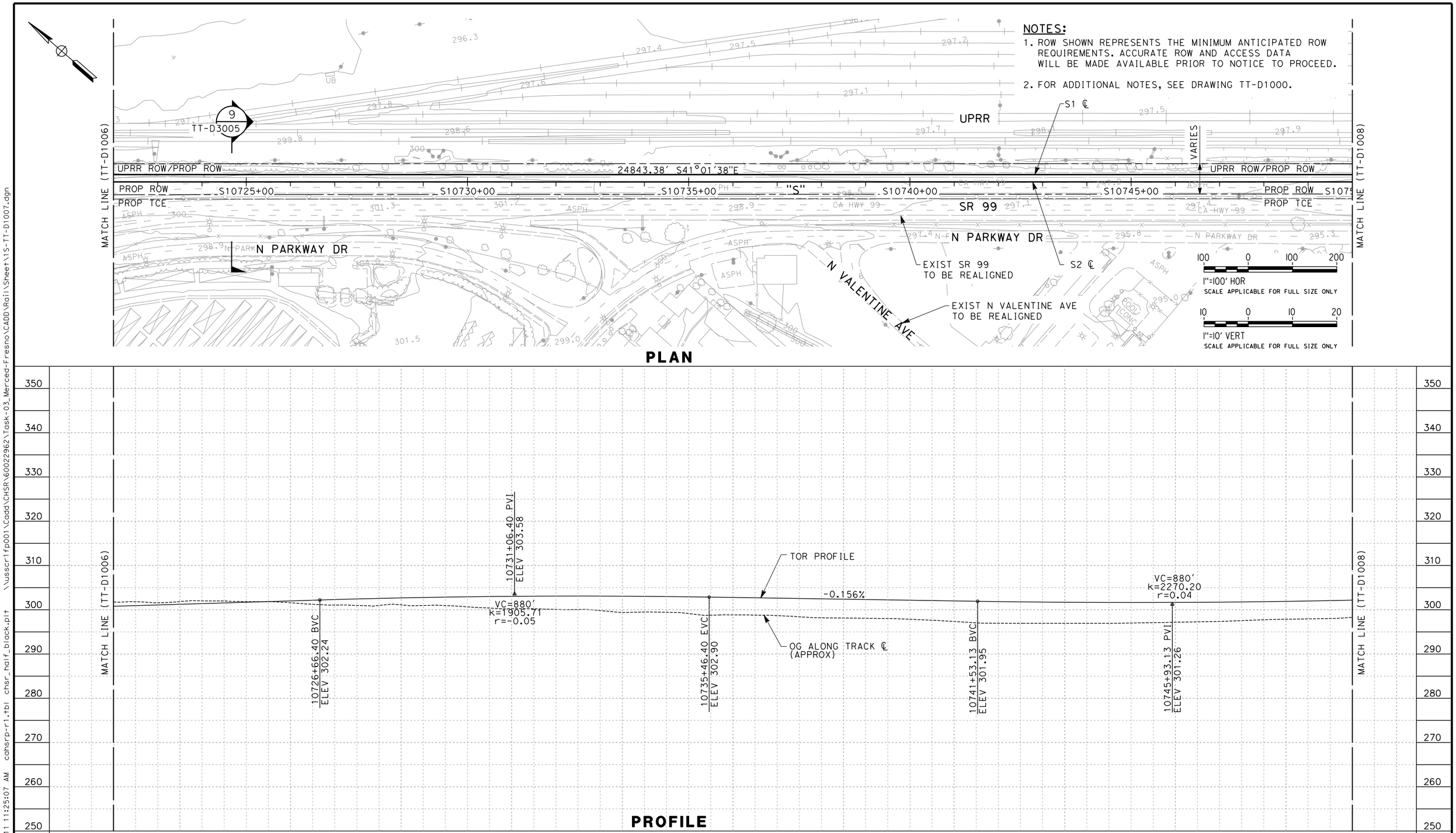

REV	DATE	BY	CHK	APP	DESCRIPTION

DESIGNED BY A. SHIELDS
DRAWN BY H. SULLIVAN
CHECKED BY A. BOONE
IN CHARGE A. BOONE
DATE 12/08/11

PROPOSED PRELIMINARY DESIGN

NOT FOR CONSTRUCTION

AECOM Technical Services, Inc.
2020 L Street, Suite 300
Sacramento, CA 95811
CH2MHILL

CALIFORNIA HIGH-SPEED RAIL AUTHORITY

CALIFORNIA HIGH-SPEED TRAIN PROJECT
SIERRA SUBDIVISION
PACKAGE 1A
TRACK GUIDEWAY
PLAN AND PROFILE
STA. 10722+00 TO 10750+00

CONTRACT NO.
DRAWING NO. TT-D1007
SCALE AS SHOWN
SHEET NO.

12/6/2011 11:25:07 AM cahsrp-r1.tbl chsr_half_black.plt \\usscr1fp001\Cadd\CHSR\60022962\Task-03_Merced-Fresno\CADD\Rail\Sheet\15-TT-D1007.dgn shieldsa

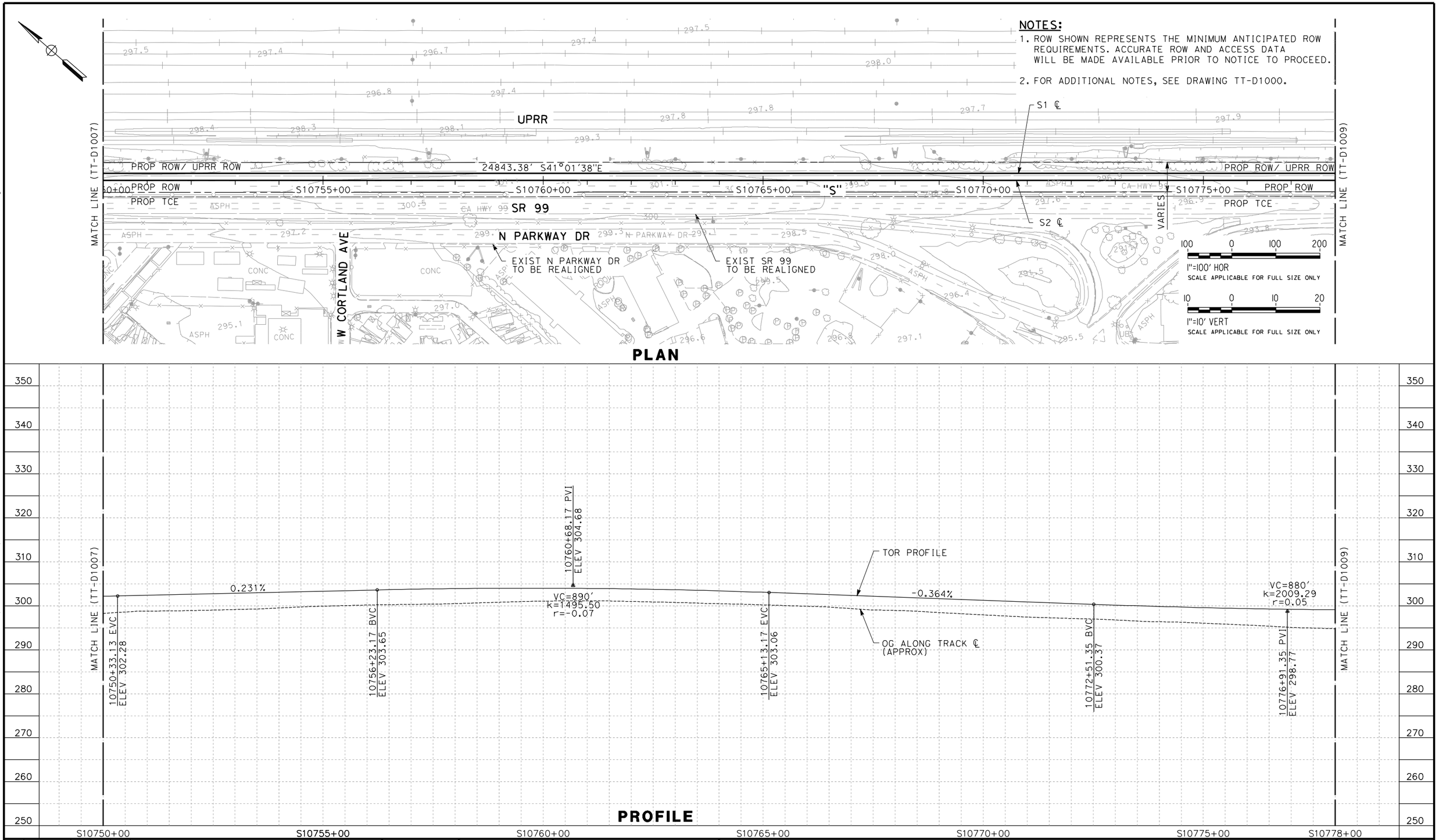

REV	DATE	BY	CHK	APP	DESCRIPTION

DESIGNED BY A. SHIELDS
DRAWN BY H. SULLIVAN
CHECKED BY A. BOONE
IN CHARGE A. BOONE
DATE 01/09/2012

PROPOSED PRELIMINARY DESIGN

NOT FOR CONSTRUCTION

AECOM Technical Services, Inc.
2020 L Street, Suite 300
Sacramento, CA 95811

CH2MHILL

CALIFORNIA HIGH-SPEED RAIL AUTHORITY

CALIFORNIA HIGH-SPEED TRAIN PROJECT
SIERRA SUBDIVISION
PACKAGE 1A
TRACK GUIDEWAY
PLAN AND PROFILE
STA. 10750+00 TO 10778+00

CONTRACT NO.
DRAWING NO. TT-D1008
SCALE AS SHOWN
SHEET NO.

1/20/2012 11:33:05 AM CAHSRP-r1.tbl CHSR_half_black3.plt \\usscr1fp001\Cadd\CHSR\60022962\Task-03_Merced-Fresno\cadd\Rail\Sheet\1S-TT-D1008.dgn sullivanh

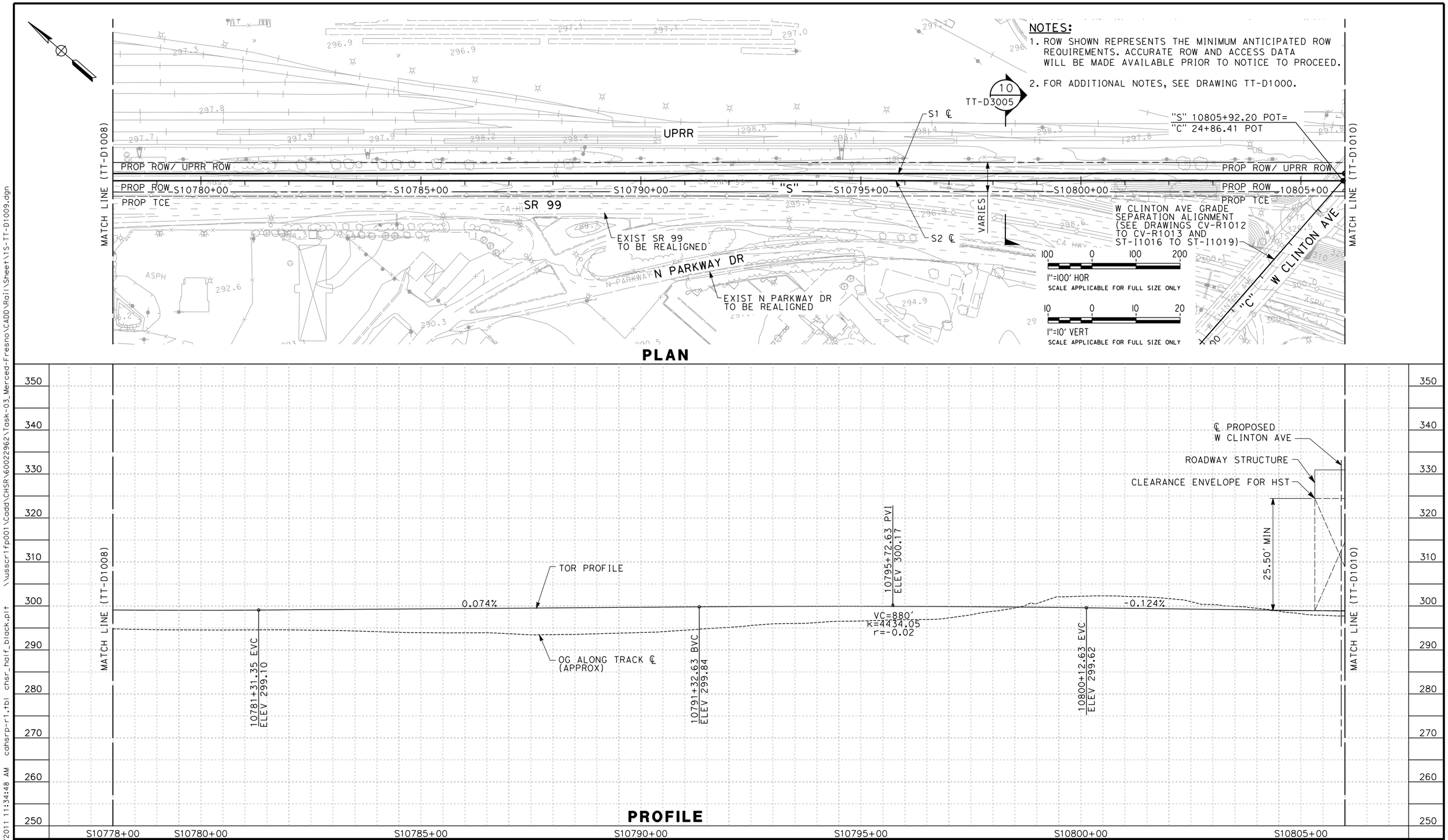

REV	DATE	BY	CHK	APP	DESCRIPTION

DESIGNED BY A. SHIELDS
DRAWN BY H. SULLIVAN
CHECKED BY A. BOONE
IN CHARGE A. BOONE
DATE 12/08/11

PROPOSED PRELIMINARY DESIGN

NOT FOR CONSTRUCTION

AECOM Technical Services, Inc.
2020 L Street, Suite 300
Sacramento, CA 95811
CH2MHILL

CALIFORNIA HIGH-SPEED RAIL AUTHORITY

CALIFORNIA HIGH-SPEED TRAIN PROJECT
SIERRA SUBDIVISION
PACKAGE 1A
TRACK GUIDEWAY
PLAN AND PROFILE
STA. 10778+00 TO 10806+00

CONTRACT NO.
DRAWING NO. TT-D1009
SCALE AS SHOWN
SHEET NO.

12/6/2011 11:34:48 AM cahsrp-r1.tbl chsr_half_black.plt \\usscr1fp001\Cadd\CHSR\60022962\Task-03_Merced-Fresno\CADD\Rail\Sheet\1S-TT-D1009.dgn shieldsa

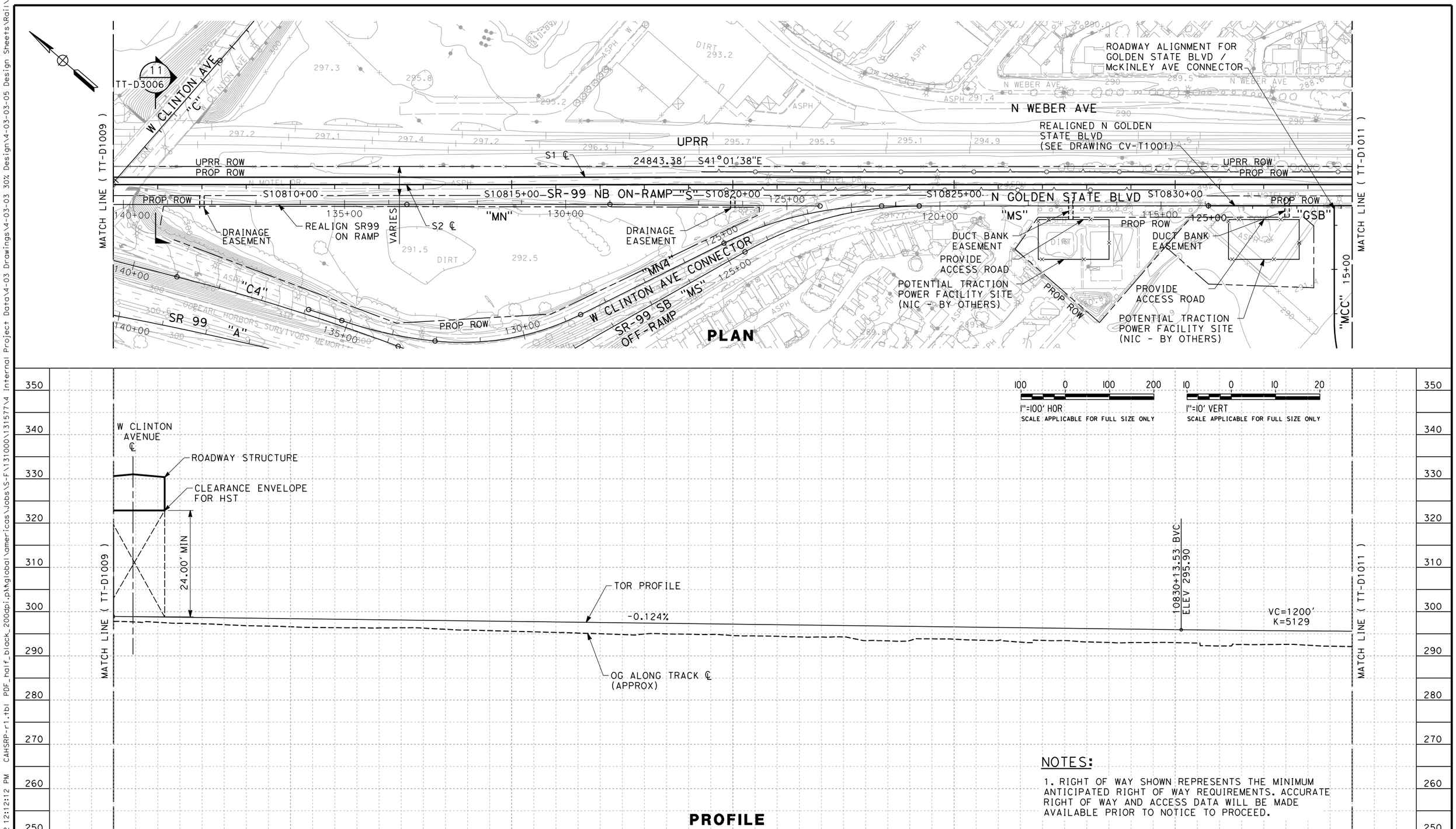

NOTES:

1. RIGHT OF WAY SHOWN REPRESENTS THE MINIMUM ANTICIPATED RIGHT OF WAY REQUIREMENTS. ACCURATE RIGHT OF WAY AND ACCESS DATA WILL BE MADE AVAILABLE PRIOR TO NOTICE TO PROCEED.

REV	DATE	BY	CHK	APP	DESCRIPTION

DESIGNED BY K. SEYMOUR
DRAWN BY P. TONKIN
CHECKED BY D. HUNT
IN CHARGE R. COFFIN
DATE 02/21/12

PROPOSED PRELIMINARY DESIGN

NOT FOR CONSTRUCTION

URS | HMM | ARUP
CALIFORNIA HIGH-SPEED TRAIN

CALIFORNIA HIGH-SPEED RAIL AUTHORITY

CALIFORNIA HIGH-SPEED TRAIN PROJECT
SIERRA SUBDIVISION
PACKAGE 1A
TRACK GUIDEWAY
PLAN AND PROFILE
STA. 10806+00 TO STA. 10834+00

CONTRACT NO.
DRAWING NO. TT-D1010
SCALE AS SHOWN
SHEET NO.

paul.tonkin 2/22/2012 12:12:12 PM CAHSRP-r1.tbl PDF_half_black_200dpi.pltglobal\americas\Jobs\S-F\131000\131577\4 Internal Project Data\4-03 Drawings\4-03-03 30% Design\4-03-03-05 Design Sheets\Rail\1A E

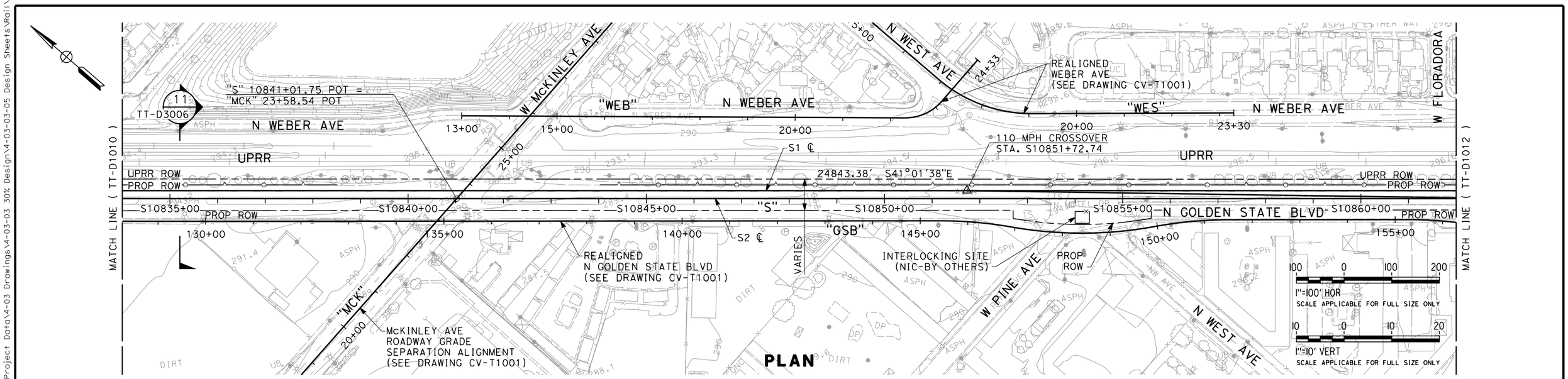

PLAN

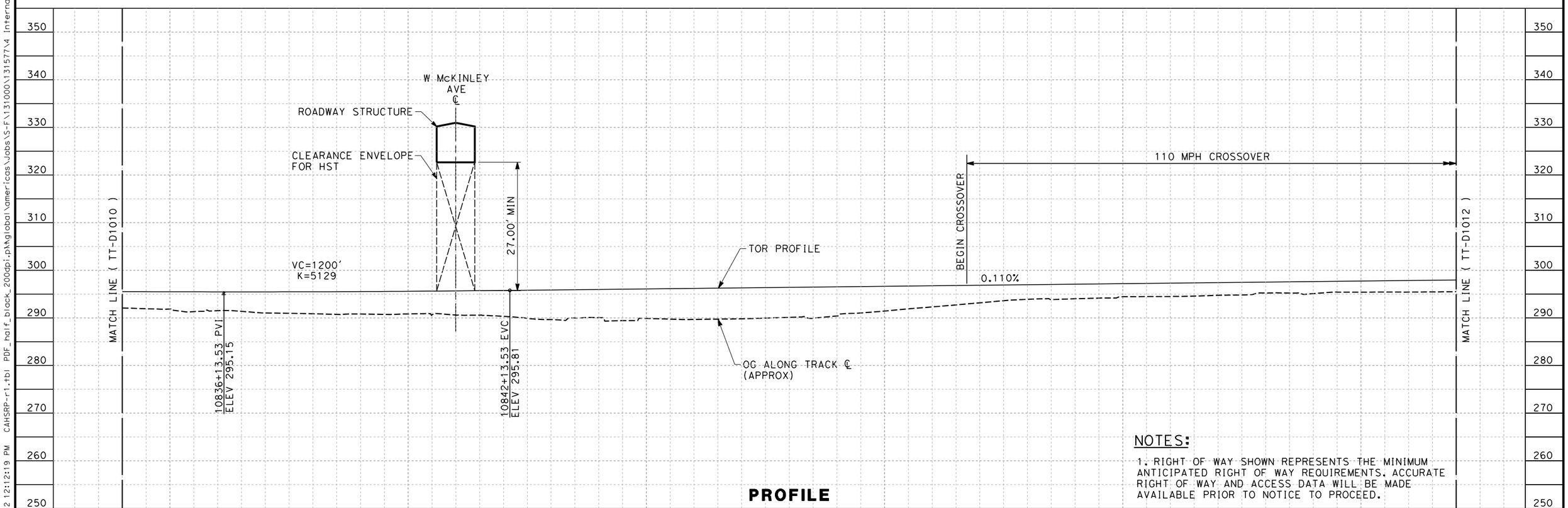

PROFILE

NOTES:

1. RIGHT OF WAY SHOWN REPRESENTS THE MINIMUM ANTICIPATED RIGHT OF WAY REQUIREMENTS. ACCURATE RIGHT OF WAY AND ACCESS DATA WILL BE MADE AVAILABLE PRIOR TO NOTICE TO PROCEED.

REV	DATE	BY	CHK	APP	DESCRIPTION

DESIGNED BY K. SEYMOUR
DRAWN BY P. TONKIN
CHECKED BY D. HUNT
IN CHARGE R. COFFIN
DATE 02/21/12

PROPOSED PRELIMINARY DESIGN

NOT FOR CONSTRUCTION

URS | HMM | ARUP
CALIFORNIA HIGH-SPEED TRAIN

CALIFORNIA HIGH-SPEED RAIL AUTHORITY

CALIFORNIA HIGH-SPEED TRAIN PROJECT
SIERRA SUBDIVISION
PACKAGE 1A
TRACK GUIDEWAY
PLAN AND PROFILE
STA. 10834+00 TO STA. 10862+00

CONTRACT NO.
DRAWING NO. TT-D1011
SCALE AS SHOWN
SHEET NO.

paul.tonkin 2/22/2012 12:12:19 PM CAHSRP-r1.tbl PDF_half_black_200dpi.pktglobalamericas\Jobs\S-F\131000\131577\4 Internal Project Data\4-03 Drawings\4-03-03 30% Design\4-03-03-05 Design Sheets\Rail\1A E

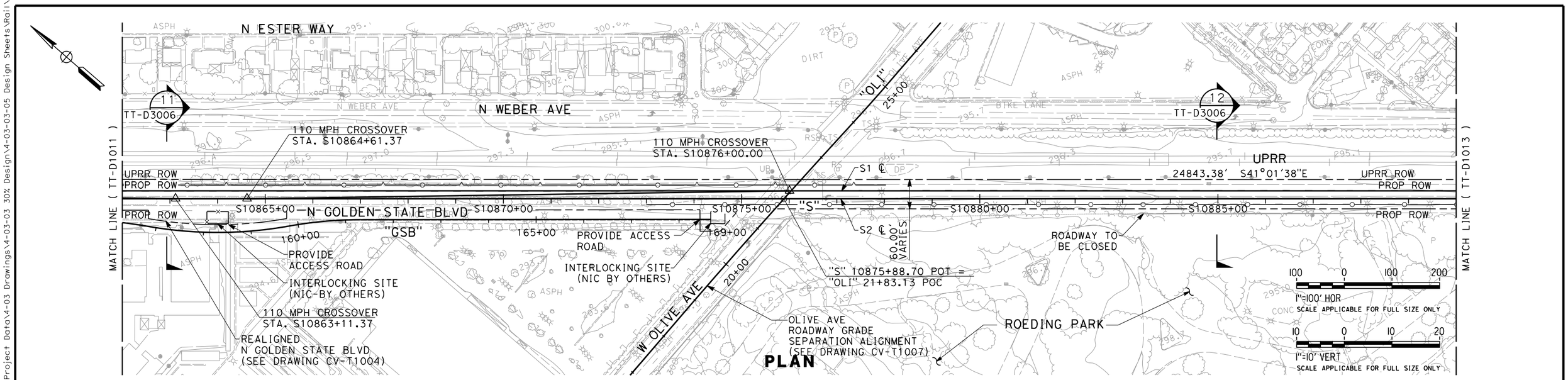

PLAN

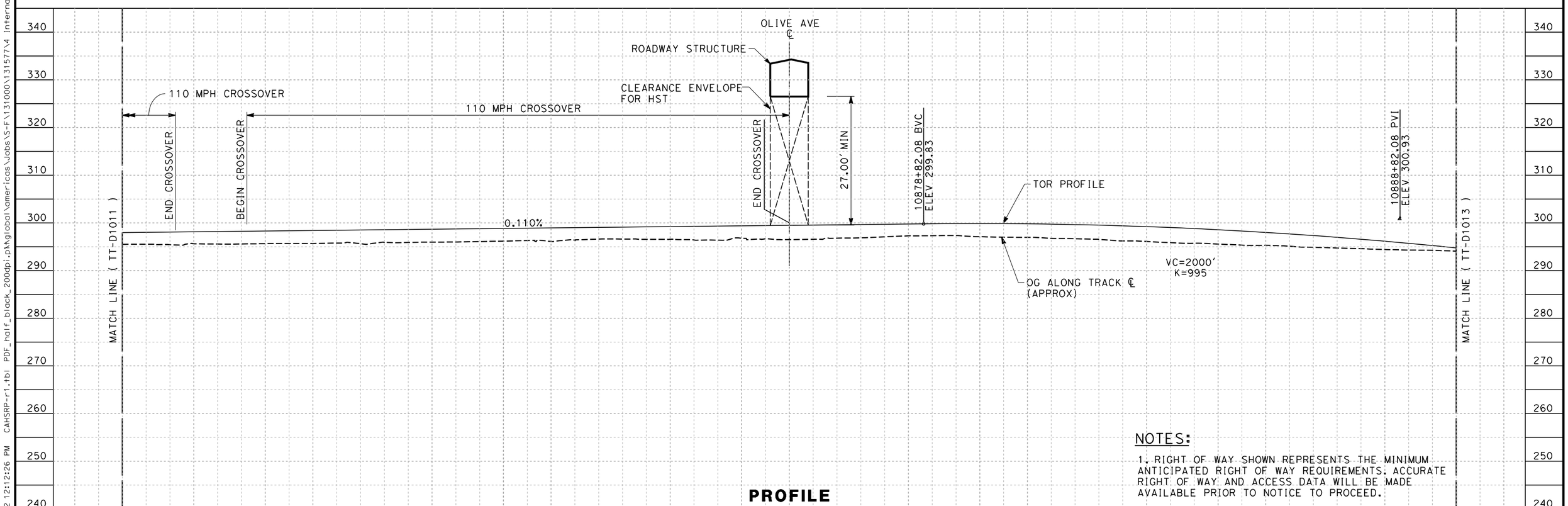

PROFILE

NOTES:

1. RIGHT OF WAY SHOWN REPRESENTS THE MINIMUM ANTICIPATED RIGHT OF WAY REQUIREMENTS. ACCURATE RIGHT OF WAY AND ACCESS DATA WILL BE MADE AVAILABLE PRIOR TO NOTICE TO PROCEED.

REV	DATE	BY	CHK	APP	DESCRIPTION

DESIGNED BY K. SEYMOUR
DRAWN BY P. TONKIN
CHECKED BY D. HUNT
IN CHARGE R. COFFIN
DATE 02/21/12

PROPOSED PRELIMINARY DESIGN

NOT FOR CONSTRUCTION

URS | HMM | ARUP
CALIFORNIA HIGH-SPEED TRAIN

CALIFORNIA HIGH-SPEED RAIL AUTHORITY

CALIFORNIA HIGH-SPEED TRAIN PROJECT
SIERRA SUBDIVISION
PACKAGE 1A
TRACK GUIDEWAY
PLAN AND PROFILE
STA. 10862+00 TO STA. 10890+00

CONTRACT NO.
DRAWING NO. TT-D1012
SCALE AS SHOWN
SHEET NO.

paul.tonkin 2/22/2012 12:12:26 PM CAHSRP-r1.tbl PDF_half_black_200dpi.pktglobalamericas\Jobs\S-F\131000\131577\4 Internal Project Data\4-03 Drawings\4-03-03 30% Design\4-03-03-05 Design Sheets\Rail\A E

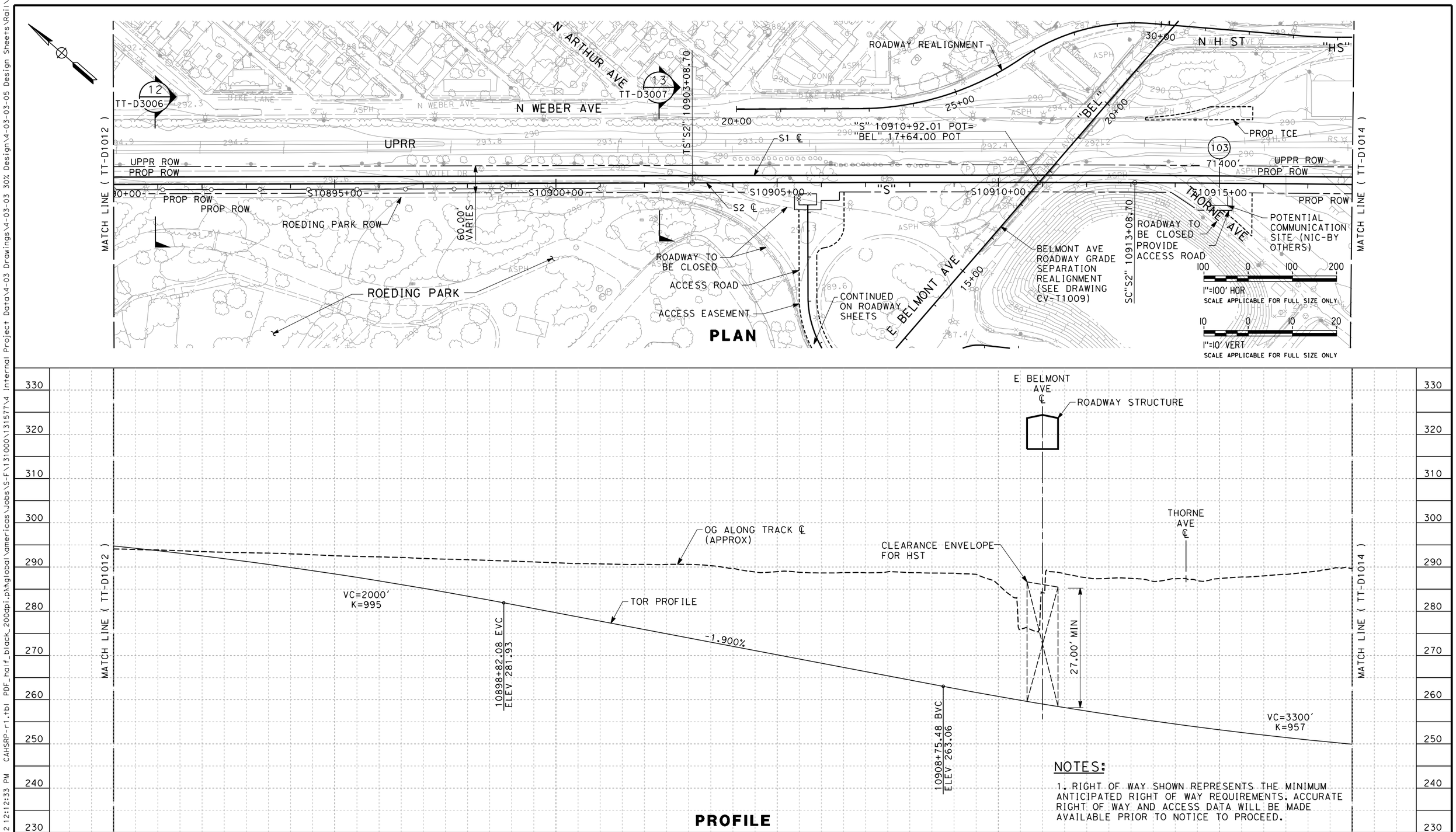

NOTES:

1. RIGHT OF WAY SHOWN REPRESENTS THE MINIMUM ANTICIPATED RIGHT OF WAY REQUIREMENTS. ACCURATE RIGHT OF WAY AND ACCESS DATA WILL BE MADE AVAILABLE PRIOR TO NOTICE TO PROCEED.

REV	DATE	BY	CHK	APP	DESCRIPTION

DESIGNED BY K. SEYMOUR
DRAWN BY P. TONKIN
CHECKED BY D. HUNT
IN CHARGE R. COFFIN
DATE 02/21/12

PROPOSED PRELIMINARY DESIGN

NOT FOR CONSTRUCTION

URS | HMM | ARUP
CALIFORNIA HIGH-SPEED TRAIN

CALIFORNIA HIGH-SPEED RAIL AUTHORITY

CALIFORNIA HIGH-SPEED TRAIN PROJECT
SIERRA SUBDIVISION
PACKAGE 1A
TRACK GUIDEWAY
PLAN AND PROFILE
STA. 10890+00 TO STA. 10918+00

CONTRACT NO.
DRAWING NO. TT-D1013
SCALE AS SHOWN
SHEET NO.

paul.tonkin 2/22/2012 12:12:33 PM CAHSRP-r1.tbl PDF_half_black_200dpi:pkhglobalamericas\Jobs\S-F\131000\131577\4 Internal Project Data\4-03 Drawings\4-03-03 30% Design\4-03-03-05 Design Sheets\Rail\1A E

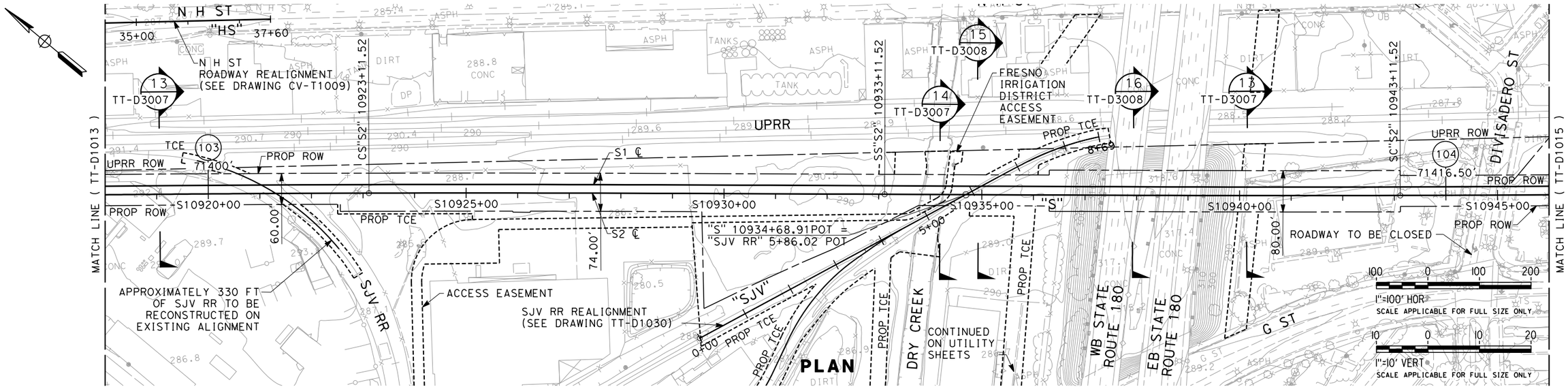

PLAN

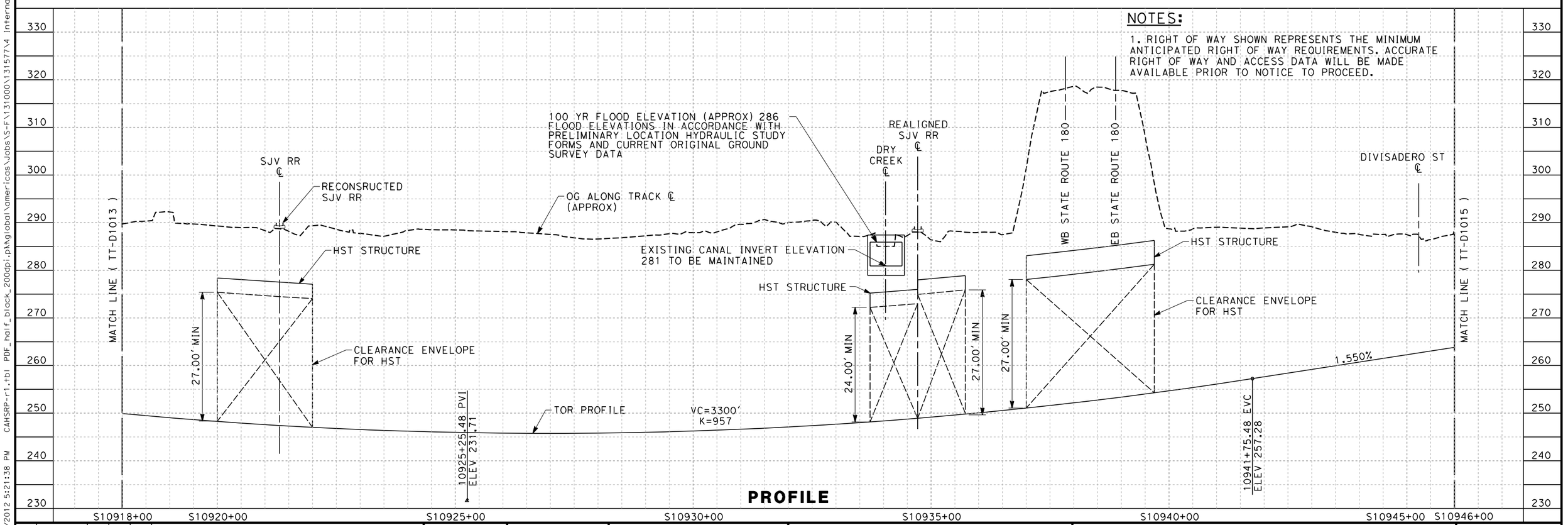

PROFILE

NOTES:

1. RIGHT OF WAY SHOWN REPRESENTS THE MINIMUM ANTICIPATED RIGHT OF WAY REQUIREMENTS. ACCURATE RIGHT OF WAY AND ACCESS DATA WILL BE MADE AVAILABLE PRIOR TO NOTICE TO PROCEED.

REV	DATE	BY	CHK	APP	DESCRIPTION

DESIGNED BY K. SEYMOUR
DRAWN BY P. TONKIN
CHECKED BY D. HUNT
IN CHARGE R. COFFIN
DATE 02/17/12

PROPOSED PRELIMINARY DESIGN

NOT FOR CONSTRUCTION

URS | HMM | ARUP
CALIFORNIA HIGH-SPEED TRAIN

CALIFORNIA HIGH-SPEED RAIL AUTHORITY

CALIFORNIA HIGH-SPEED TRAIN PROJECT
SIERRA SUBDIVISION
PACKAGE 1A
TRACK GUIDEWAY
PLAN AND PROFILE
STA. 10918+00 TO STA. 10946+00

CONTRACT NO.
DRAWING NO. TT-D1014
SCALE AS SHOWN
SHEET NO.

Paul.Tonkin 2/15/2012 5:21:38 PM CAHSRP-r1.tbl PDF_half_black_200dpi.pktglobalamericas\Jobs\S-F\131000\131577\4 Internal Project Data\4-03 Drawings\4-03-03 30% Design\4-03-03-05 Design Sheets\Rail\1A

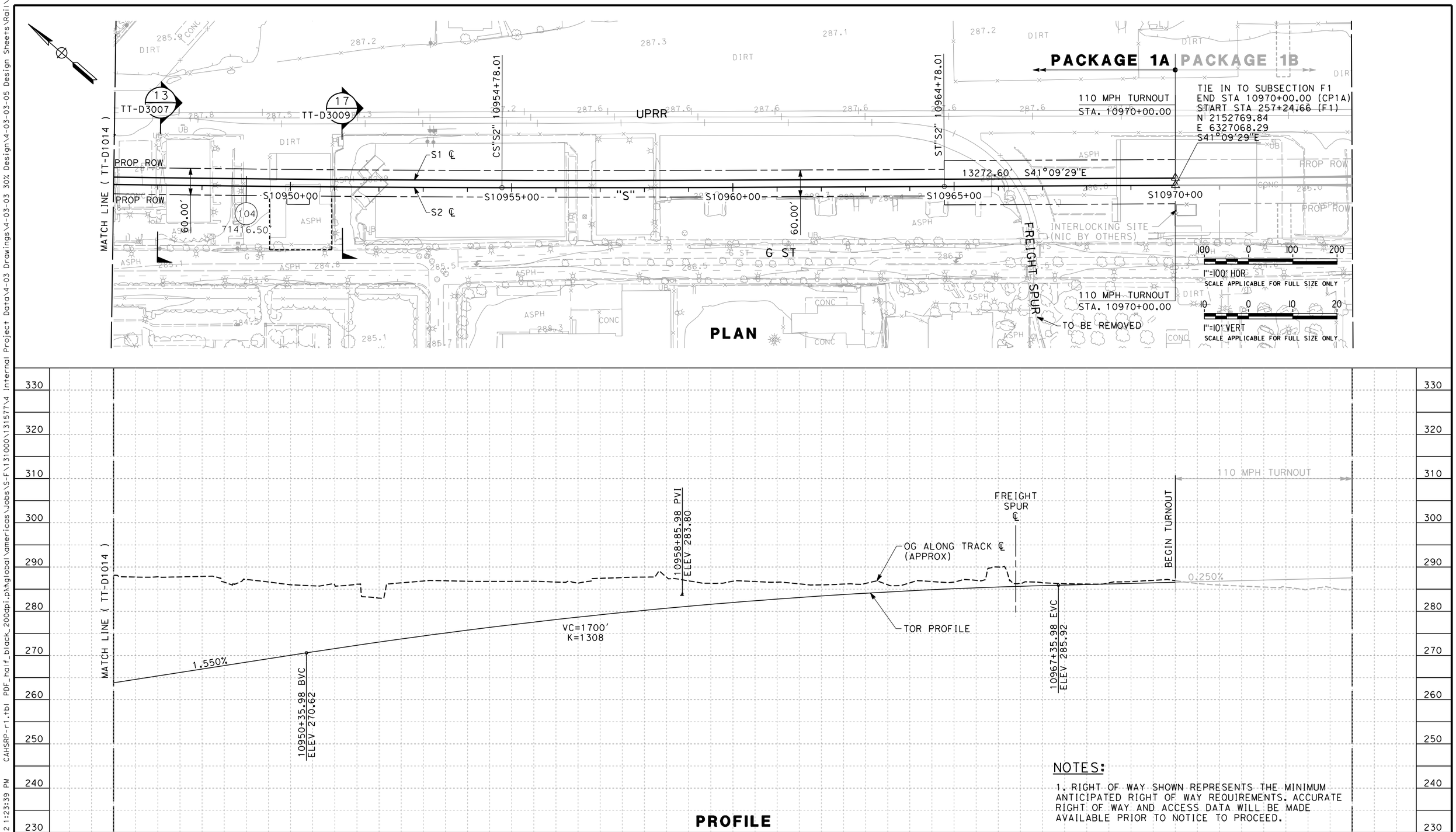

NOTES:

1. RIGHT OF WAY SHOWN REPRESENTS THE MINIMUM ANTICIPATED RIGHT OF WAY REQUIREMENTS. ACCURATE RIGHT OF WAY AND ACCESS DATA WILL BE MADE AVAILABLE PRIOR TO NOTICE TO PROCEED.

REV	DATE	BY	CHK	APP	DESCRIPTION

DESIGNED BY K. SEYMOUR
DRAWN BY P. TONKIN
CHECKED BY D. HUNT
IN CHARGE R. COFFIN
DATE 02/21/12

PROPOSED PRELIMINARY DESIGN

NOT FOR CONSTRUCTION

URS | HMM | ARUP
CALIFORNIA HIGH-SPEED TRAIN

CALIFORNIA HIGH-SPEED RAIL AUTHORITY

CALIFORNIA HIGH-SPEED TRAIN PROJECT
SIERRA SUBDIVISION
PACKAGE 1A
TRACK GUIDEWAY
PLAN AND PROFILE
STA. 10946+00 TO STA. 10974+00

CONTRACT NO.
DRAWING NO. TT-D1015
SCALE AS SHOWN
SHEET NO.

paul.tonkin 2/22/2012 1:23:39 PM CAHSRP-r1.tbl PDF_half_black_200dpi:pkhglobalamericas\Jobs\S-F\131000\131577\4 Internal Project Data\4-03 Drawings\4-03-03 30% Design\4-03-03-05 Design Sheets\Rail\1A E

PLAN

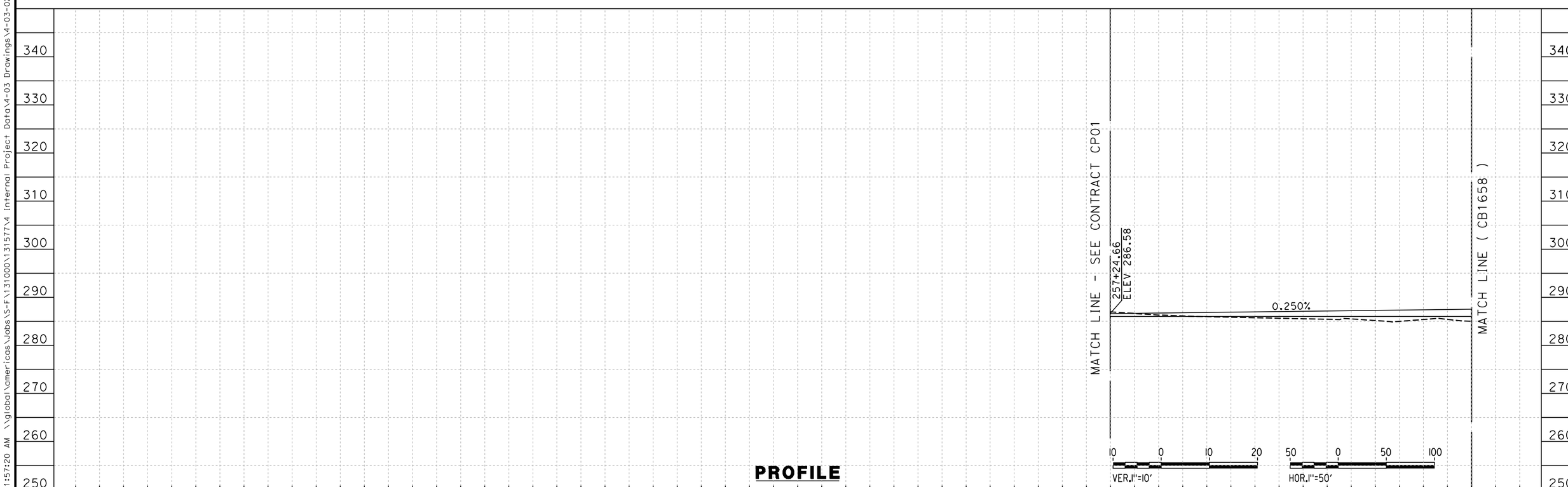

PROFILE

REV	DATE	BY	CHK	APP	DESCRIPTION

DESIGNED BY K. SEYMOUR
DRAWN BY P. TONKIN
CHECKED BY D. HUNT
IN CHARGE R. COFFIN
DATE 02/15/12

RECORD SET 15% DESIGN SUBMISSION - NOT FOR CONSTRUCTION

URS | HMM | ARUP
CALIFORNIA HIGH-SPEED TRAIN

CALIFORNIA HIGH-SPEED RAIL AUTHORITY

CALIFORNIA HIGH-SPEED TRAIN PROJECT
FRESNO TO BAKERSFIELD
FRESNO SUBSECTION
ALIGNMENT F1
STA. 257+24.56 TO 261+00
PLAN AND PROFILE

CONTRACT NO. HSR 06-0003
DRAWING NO. CB1657
SCALE AS SHOWN
SHEET NO. 2 OF 23

Paul.tonkin 2/13/2012 11:57:20 AM \\global\americas\Jobs\S-F\131000\131577\4 Internal Project Data\4-03 Drawings\4-03-02 15% Redesign\4-03-02-05 Design Sheets\Rail\F1\FB-CB-1657-F1.dgn

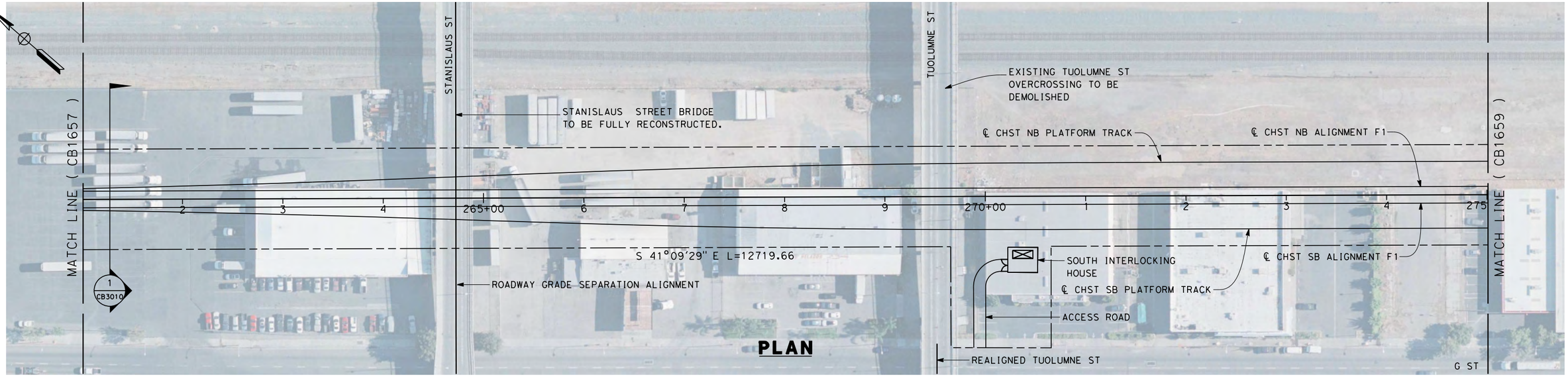

PLAN

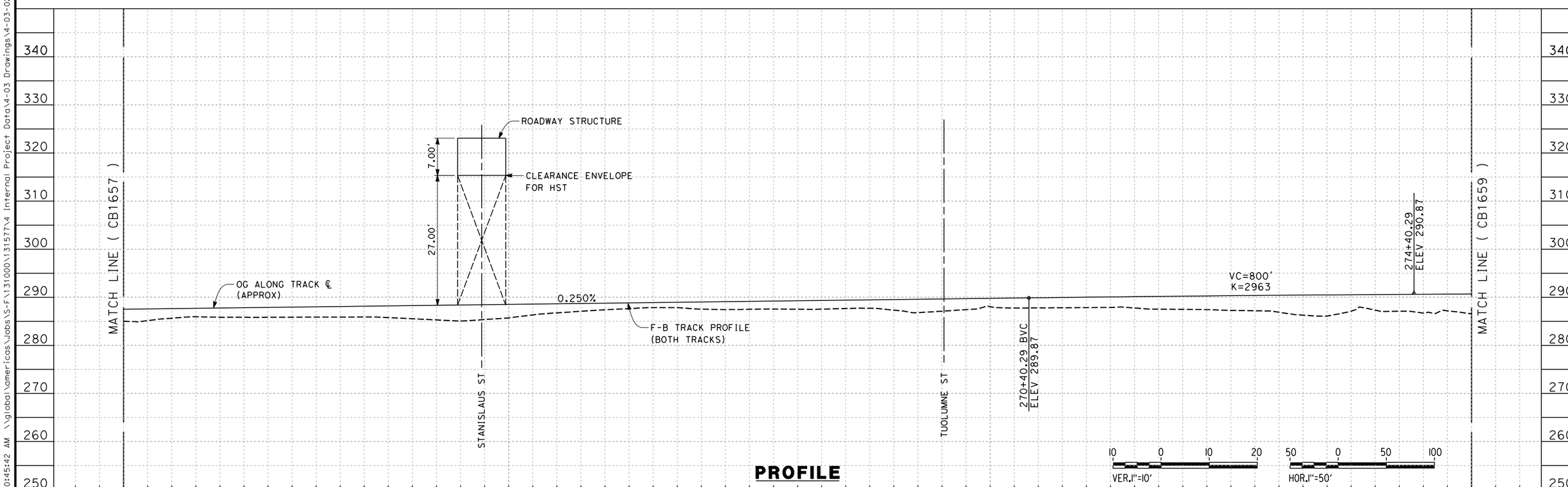

PROFILE

REV	DATE	BY	CHK	APP	DESCRIPTION

DESIGNED BY K. SEYMOUR
DRAWN BY P. TONKIN
CHECKED BY D. HUNT
IN CHARGE R. COFFIN
DATE 04/03/12

RECORD SET 15% DESIGN SUBMISSION - NOT FOR CONSTRUCTION

URS | HMM | ARUP
CALIFORNIA HIGH-SPEED TRAIN

CALIFORNIA HIGH-SPEED RAIL AUTHORITY

CALIFORNIA HIGH-SPEED TRAIN PROJECT
FRESNO TO BAKERSFIELD
FRESNO SUBSECTION
ALIGNMENT F1
STA. 261+00 TO 275+00
PLAN AND PROFILE

CONTRACT NO. HSR 06-0003
DRAWING NO. CB1658
SCALE AS SHOWN
SHEET NO.

keith.seymour 4/3/2012 10:45:42 AM \\global\americas\Jobs\S-F\131000\131577\4 Internal Project Data\4-03 Drawings\4-03-02 15% Redesign\4-03-02-05 Design Sheets\Rail\F1\FB-CB-1658-F1.dgn

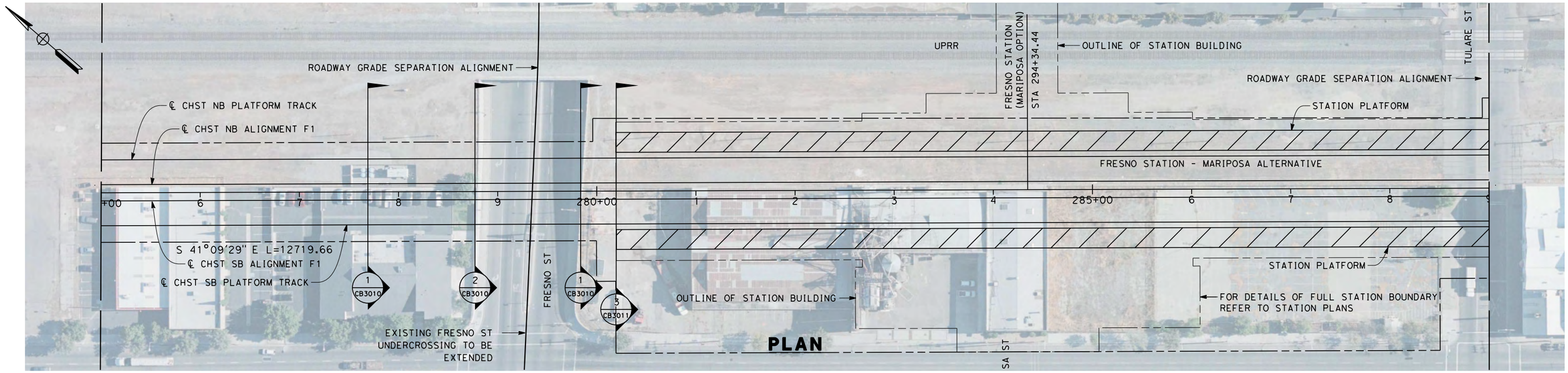

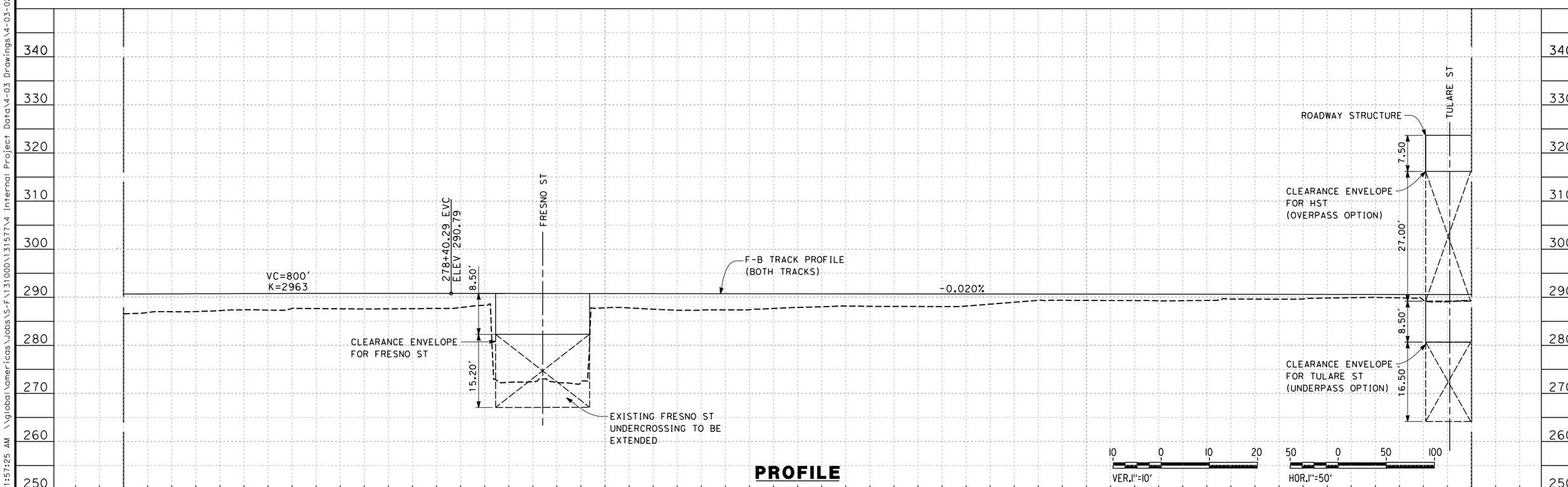

STATION	275+00	6	7	8	9	280+00	1	2	3	4	285+00	6	7	8	289+00	TOTAL
CY Exc																
CY Emb																

REV	DATE	BY	CHK	APP	DESCRIPTION

DESIGNED BY K. SEYMOUR
DRAWN BY P. TONKIN
CHECKED BY D. HUNT
IN CHARGE R. COFFIN
DATE 02/15/12

RECORD SET 15% DESIGN SUBMISSION - NOT FOR CONSTRUCTION

URS | HMM | ARUP
CALIFORNIA HIGH-SPEED TRAIN

CALIFORNIA HIGH-SPEED RAIL AUTHORITY

CALIFORNIA HIGH-SPEED TRAIN PROJECT
FRESNO TO BAKERSFIELD
FRESNO SUBSECTION
ALIGNMENT F1
STA. 275+00 TO 289+00
PLAN AND PROFILE

CONTRACT NO. HSR 06-0003
DRAWING NO. CB1659
SCALE AS SHOWN
SHEET NO. 4 OF 23

Paul.tonkin 2/13/2012 11:57:25 AM \\global\americas\Jobs\S-F\131000\131577\4 Internal Project Data\4-03 Drawings\4-03-02 15% Redesign\4-03-02-05 Design Sheets\Rail\F1\FB-CB-1659-F1.dgn

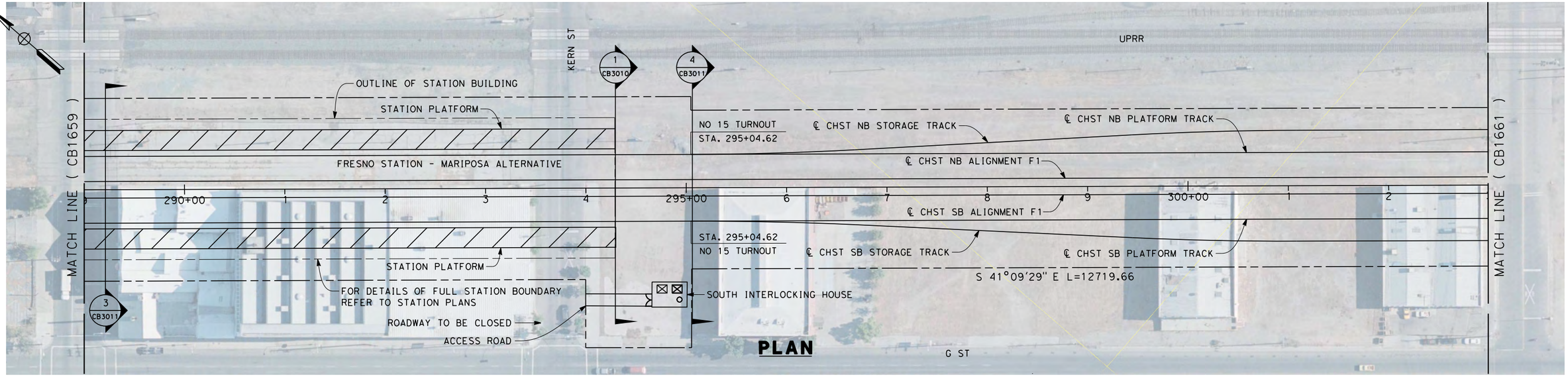

PLAN

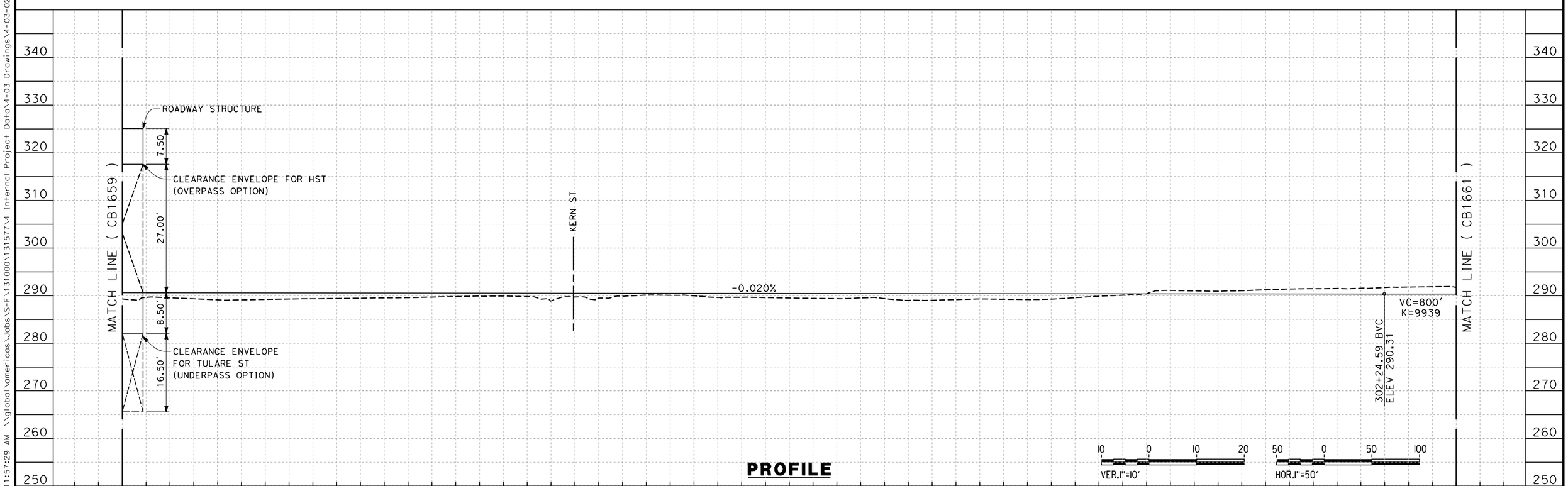

PROFILE

REV	DATE	BY	CHK	APP	DESCRIPTION

DESIGNED BY K. SEYMOUR
DRAWN BY P. TONKIN
CHECKED BY D. HUNT
IN CHARGE R. COFFIN
DATE 02/15/12

RECORD SET 15% DESIGN SUBMISSION - NOT FOR CONSTRUCTION

URS | HMM | ARUP
CALIFORNIA HIGH-SPEED TRAIN

CALIFORNIA HIGH-SPEED RAIL AUTHORITY

CALIFORNIA HIGH-SPEED TRAIN PROJECT
FRESNO TO BAKERSFIELD
FRESNO SUBSECTION
ALIGNMENT F1
STA. 289+00 TO 303+00
PLAN AND PROFILE

CONTRACT NO. HSR 06-0003
DRAWING NO. CB1660
SCALE AS SHOWN
SHEET NO. 5 OF 23

Paul.tonkin 2/13/2012 11:57:29 AM \\global\americas\Jobs\S-F\131000\131577\4 Internal Project Data\4-03 Drawings\4-03-02 15% Redesign\4-03-02-05 Design Sheets\Rail\F1\FB-CB-1660-F1.dgn

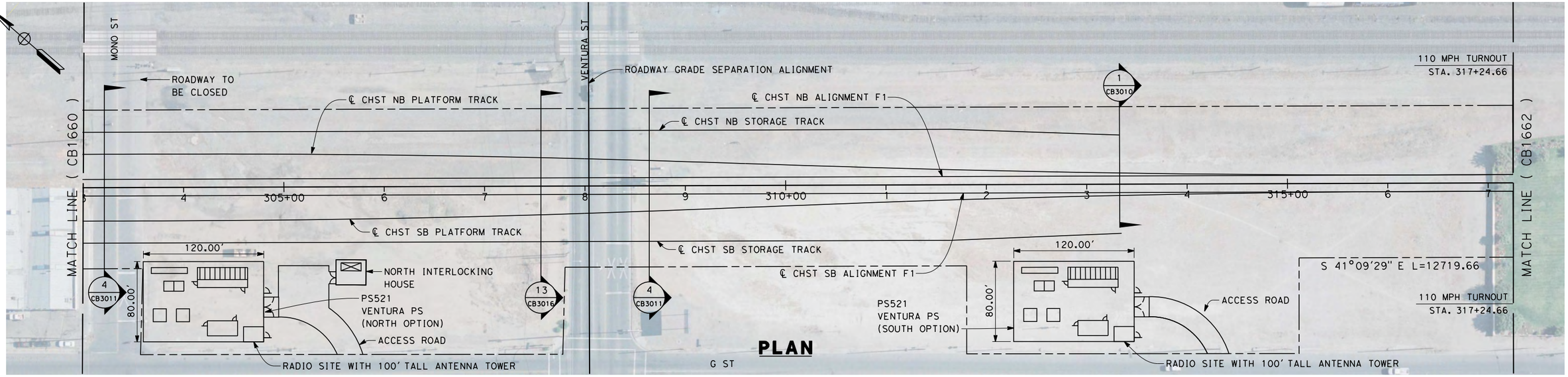

PLAN

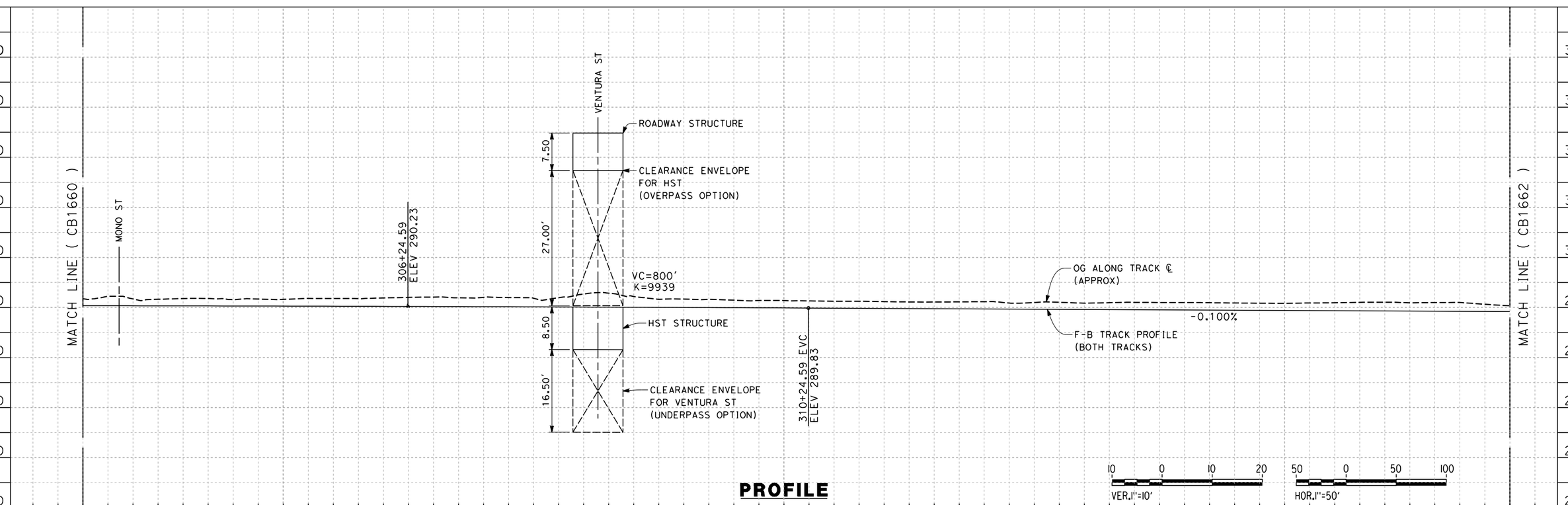

PROFILE

REV	DATE	BY	CHK	APP	DESCRIPTION

DESIGNED BY K. SEYMOUR
DRAWN BY P. TONKIN
CHECKED BY D. HUNT
IN CHARGE R. COFFIN
DATE 04/03/12

RECORD SET 15% DESIGN SUBMISSION - NOT FOR CONSTRUCTION

URS | HMM | ARUP
CALIFORNIA HIGH-SPEED TRAIN

CALIFORNIA HIGH-SPEED RAIL AUTHORITY

CALIFORNIA HIGH-SPEED TRAIN PROJECT
FRESNO TO BAKERSFIELD
FRESNO SUBSECTION
ALIGNMENT F1
STA. 303+00 TO 317+25
PLAN AND PROFILE

CONTRACT NO. HSR 06-0003
DRAWING NO. CB1661
SCALE AS SHOWN
SHEET NO.

keith.seymour 4/3/2012 10:44:53 AM \\global\americas\Jobs\S-F\131000\131577\4 Internal Project Data\4-03 Drawings\4-03-02 15% Redesign\4-03-02-05 Design Sheets\Rail\F1\FB-CB-1661-F1.dgn

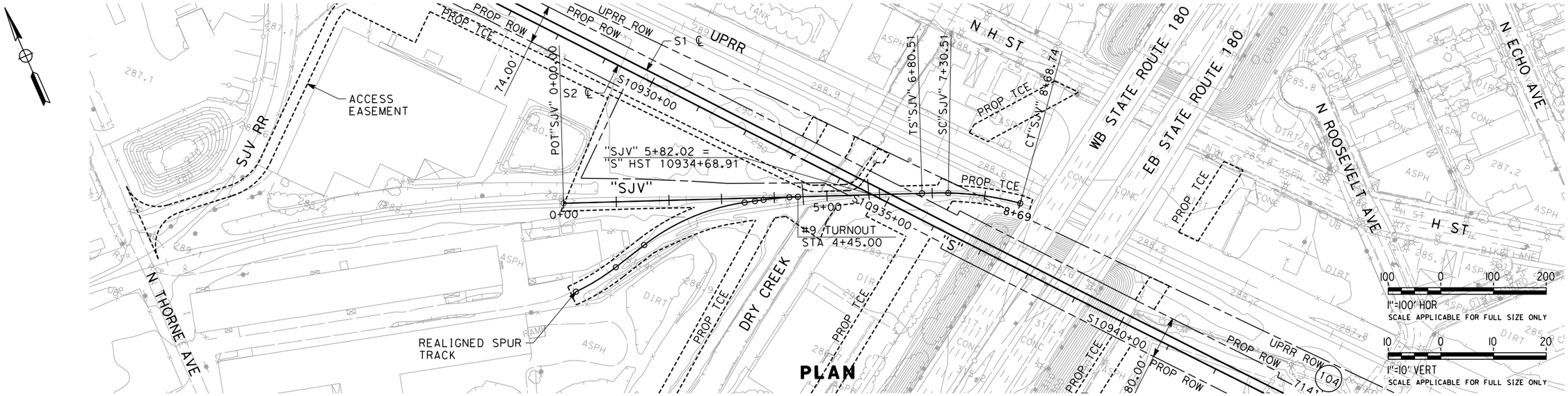

PLAN

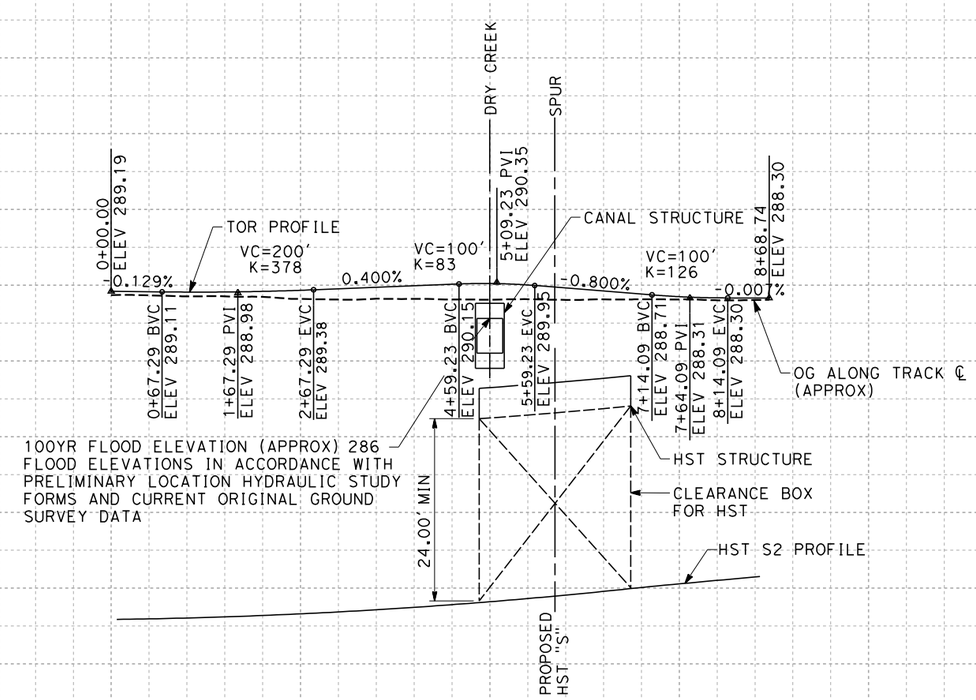

PROFILE

REV	DATE	BY	CHK	APP	DESCRIPTION

DESIGNED BY K. SEYMOUR
DRAWN BY P. TONKIN
CHECKED BY D. HUNT
IN CHARGE R. COFFIN
DATE 12/08/11

PROPOSED PRELIMINARY DESIGN

NOT FOR CONSTRUCTION

URS | HMM | ARUP
CALIFORNIA HIGH-SPEED TRAIN

CALIFORNIA HIGH-SPEED RAIL AUTHORITY

CALIFORNIA HIGH-SPEED TRAIN PROJECT
SIERRA SUBDIVISION
PACKAGE 1A
SJVRR SOUTH SPUR
PLAN AND PROFILE
STA. 00+00 TO 8+68.74

CONTRACT NO.
DRAWING NO. TT-D1030
SCALE AS SHOWN
SHEET NO.

Paul.tonkin 12/8/2011 3:09:08 PM CAHSRP-r1.tbl PDF_half_black_200dpi.pdf\S-F\131000\131577\4 Internal Project Data\4-03 Drawings\4-03-03 30% Design\4-03-03-05 Design Sheets\Rail\1A Alignments\1S-TT-D1030